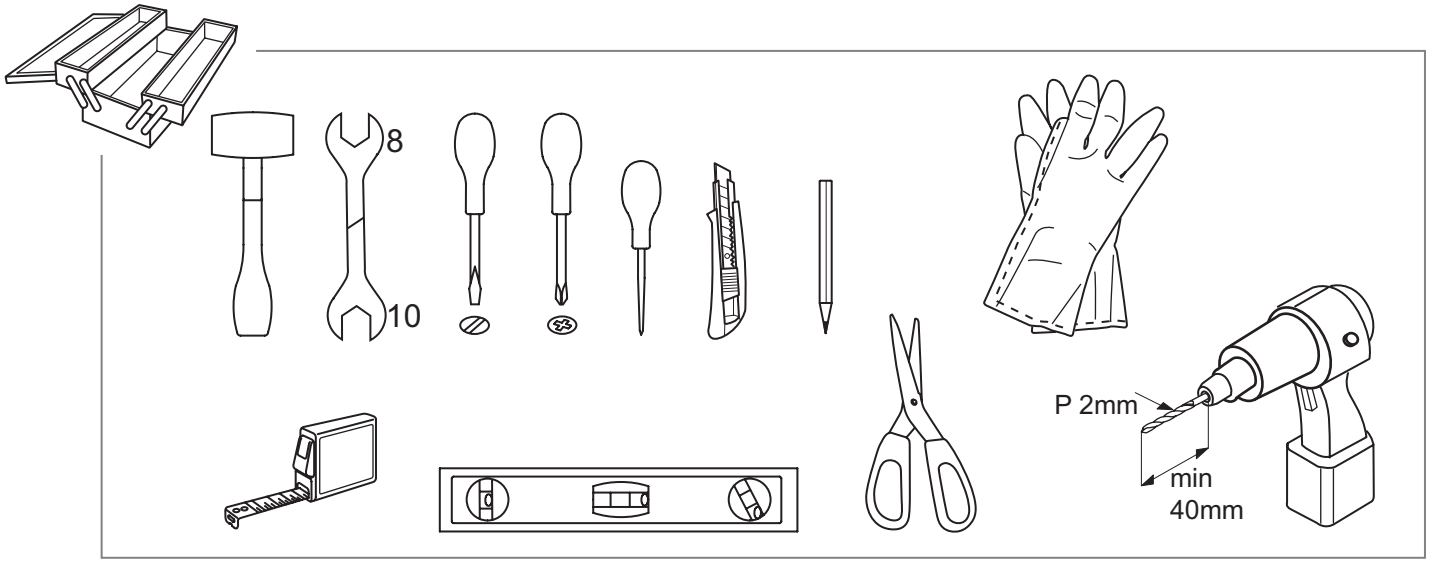
8
10
P 2mm
min
40mm

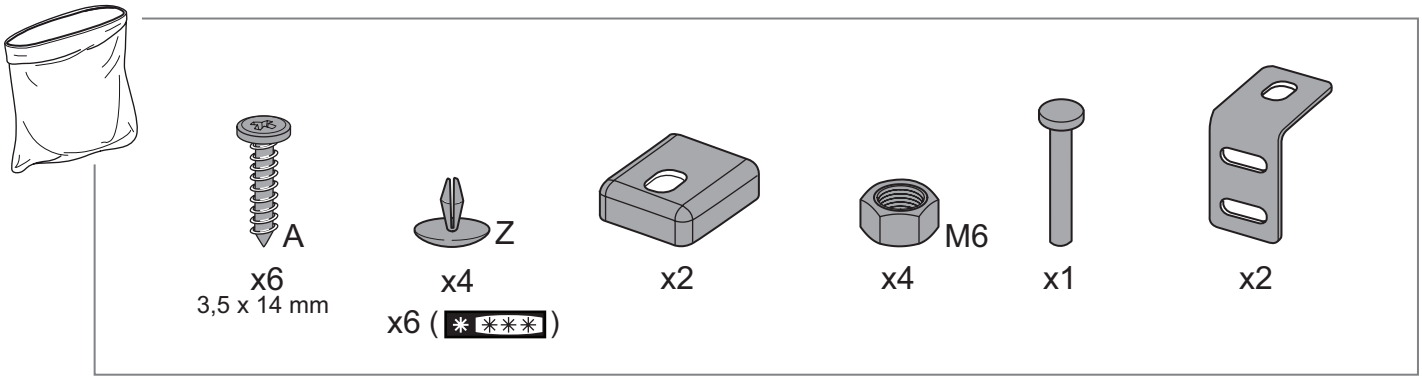
A
x6
3,5 x 14 mm
Z
x4
x6 (✱✱✱✱)
x2
M6
x4
x1
x2

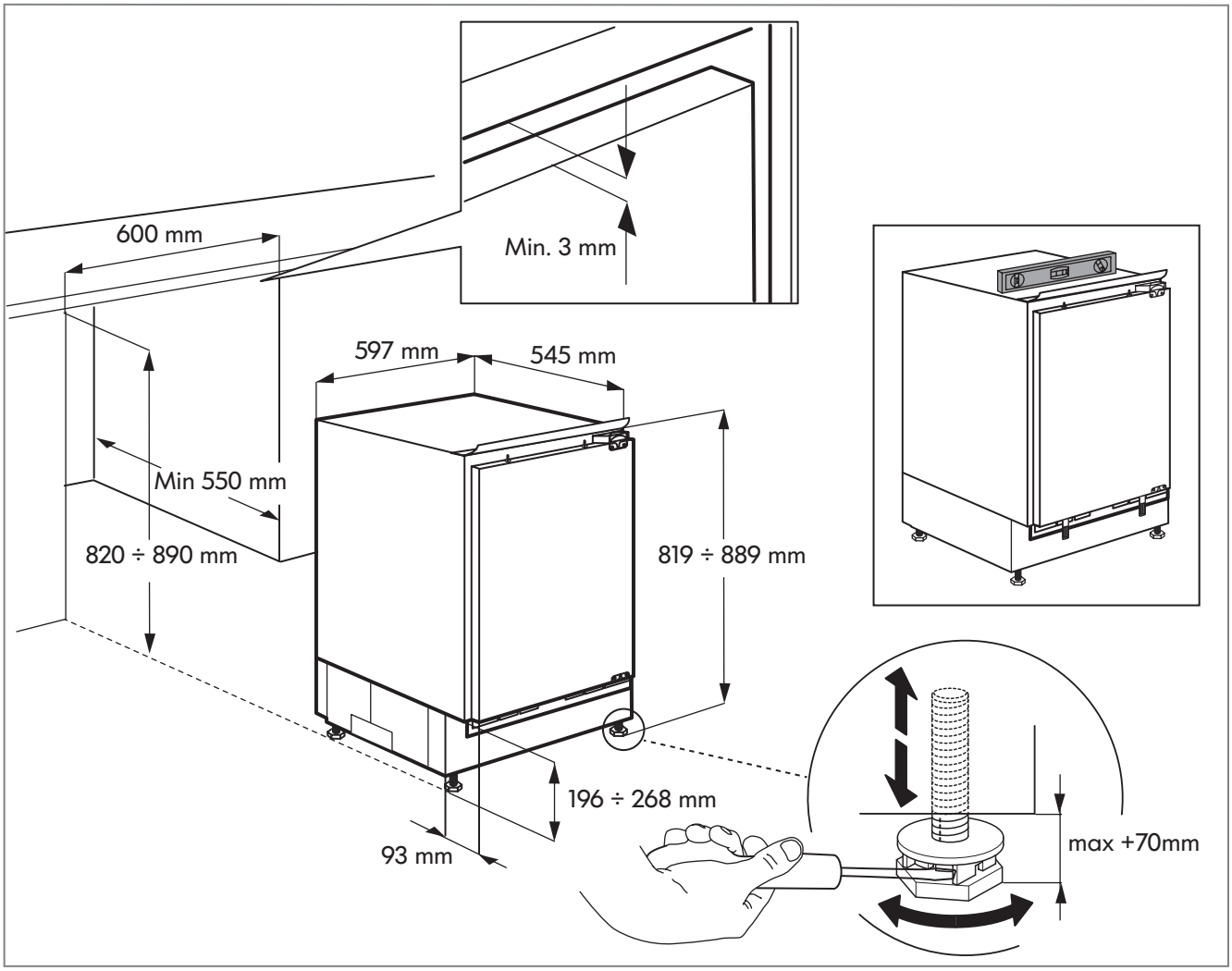
600 mm
Min. 3 mm
597 mm
545 mm
Min 550 mm
820 ÷ 890 mm
819 ÷ 889 mm
196 ÷ 268 mm
93 mm
max +70mm

1

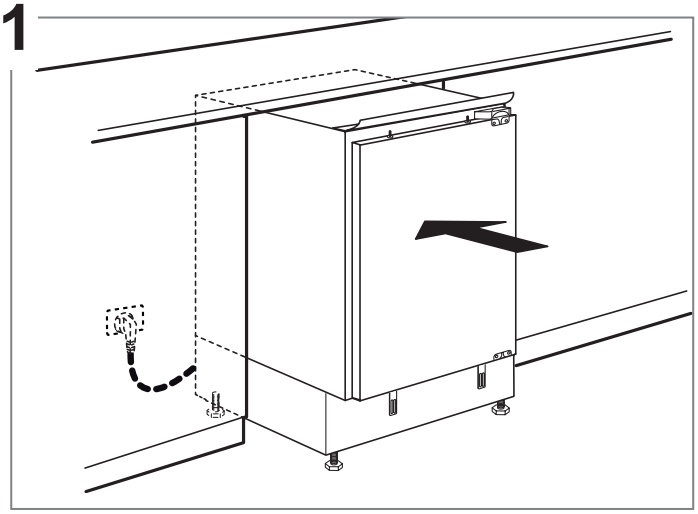

2

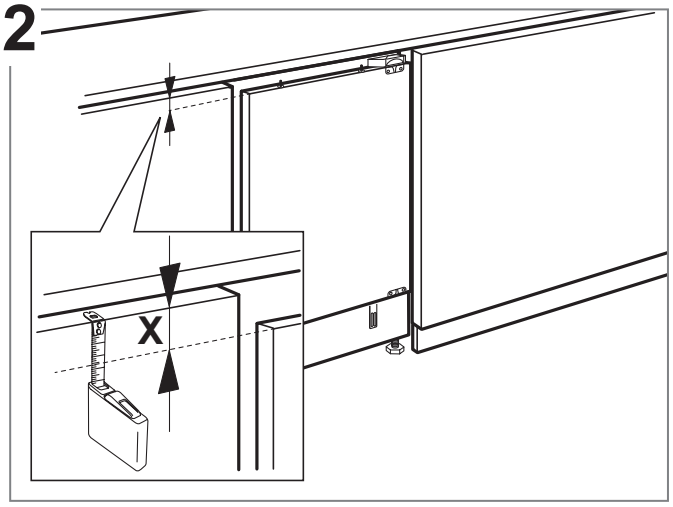

3

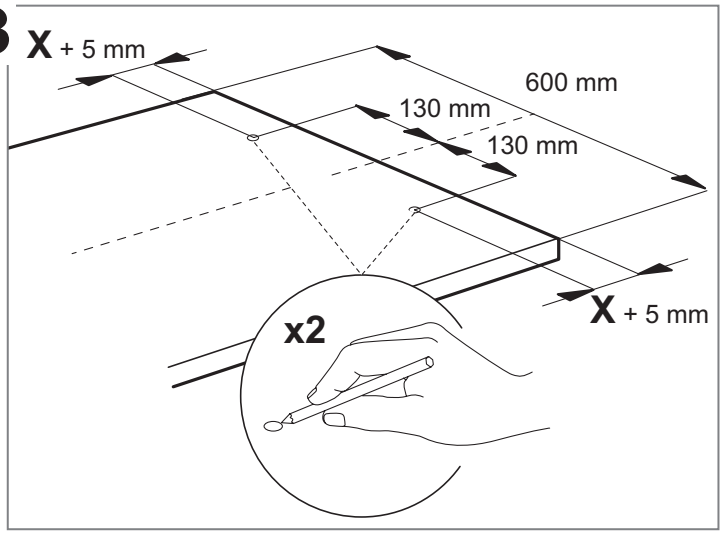

4

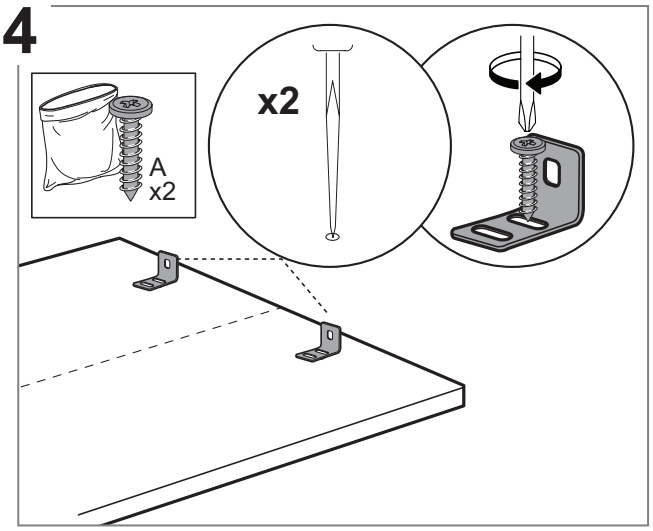

5

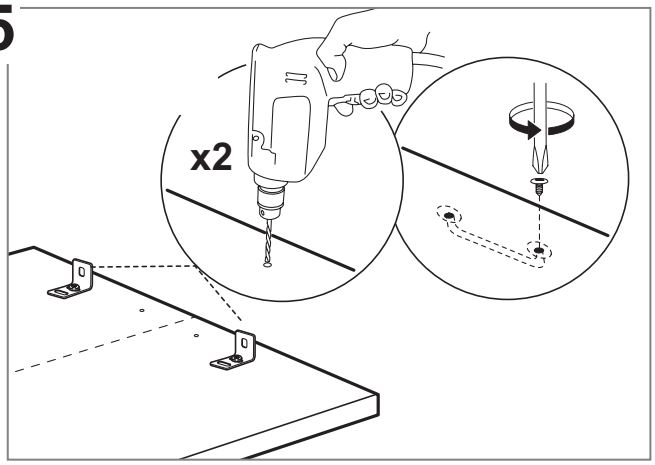

6

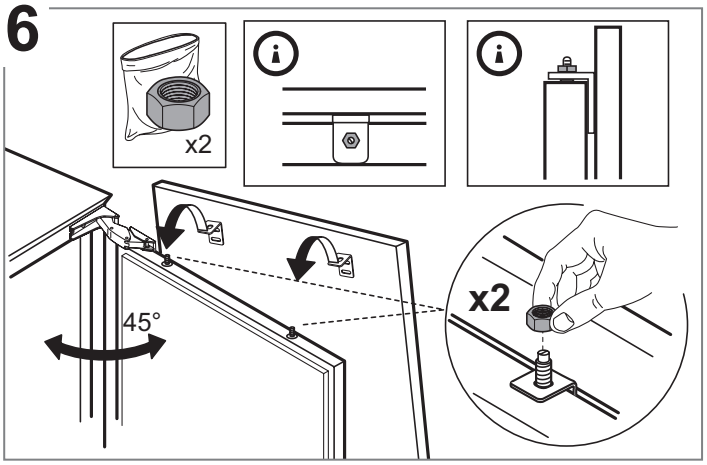

7

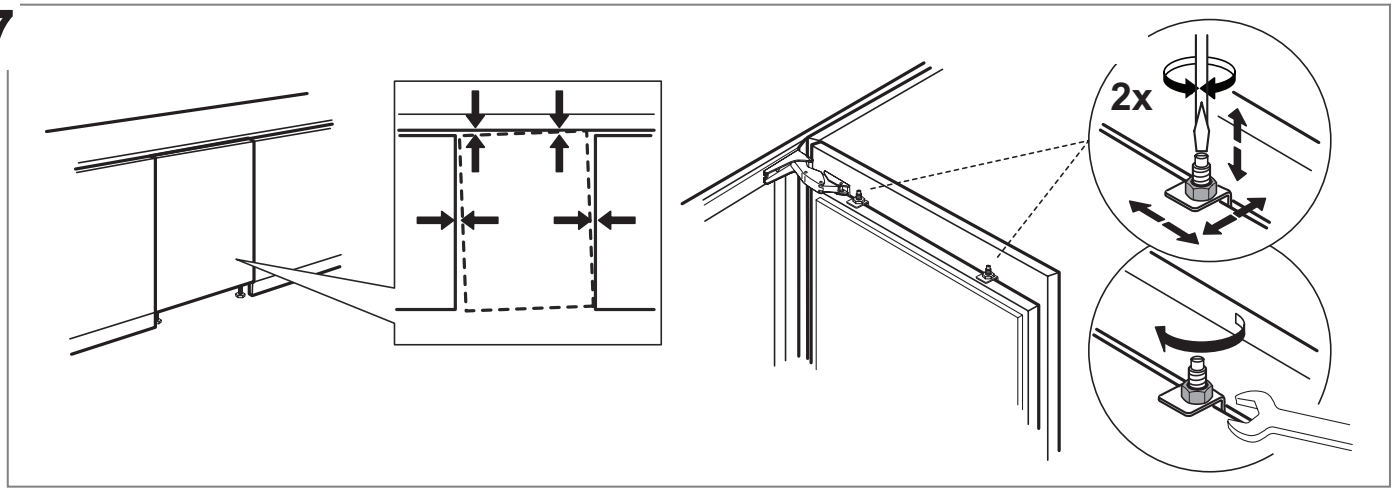

8

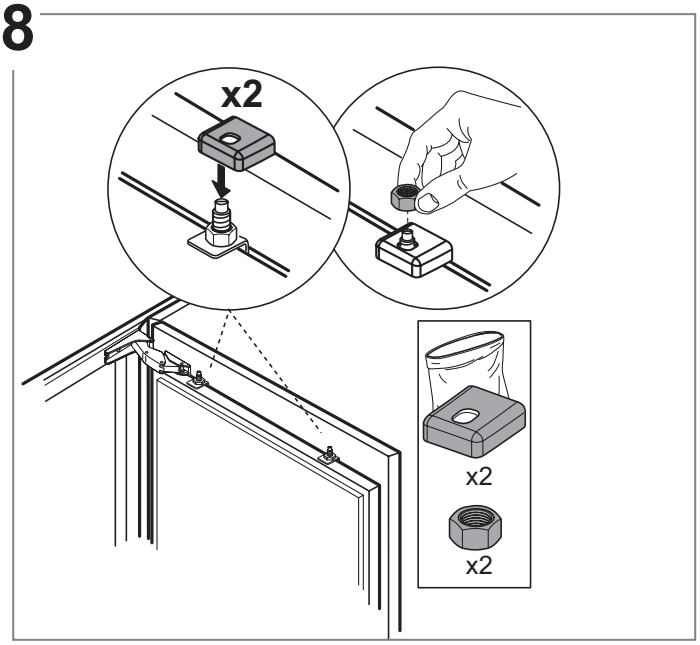

9

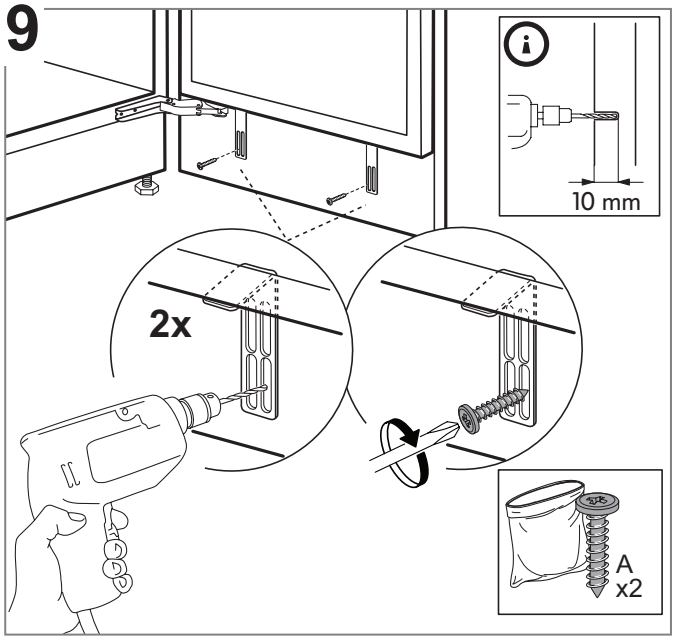

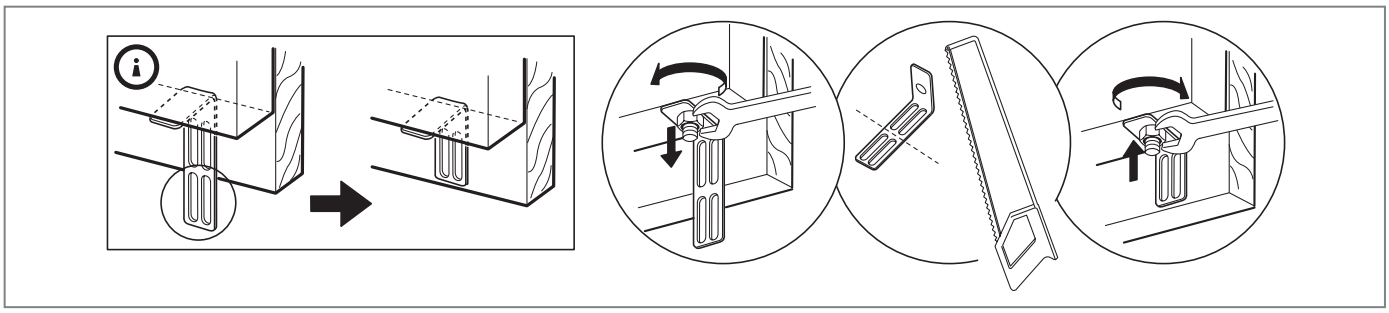

10

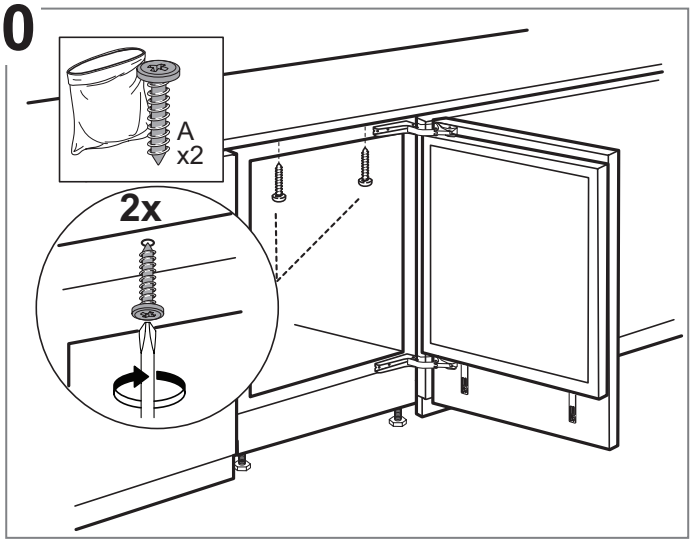

11

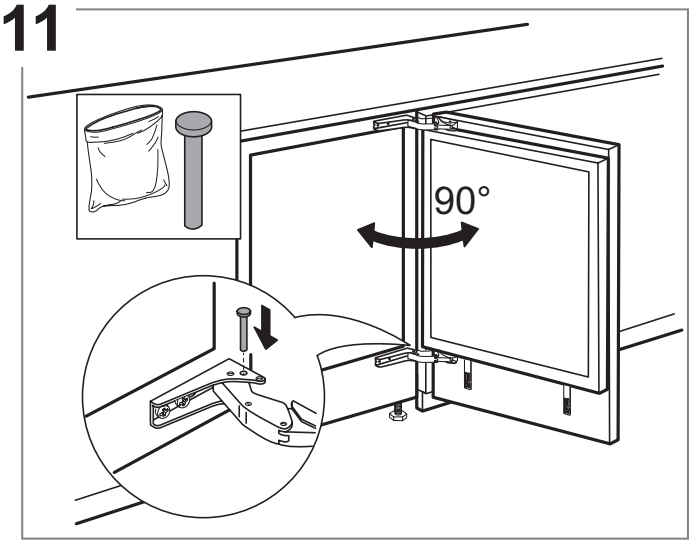

12

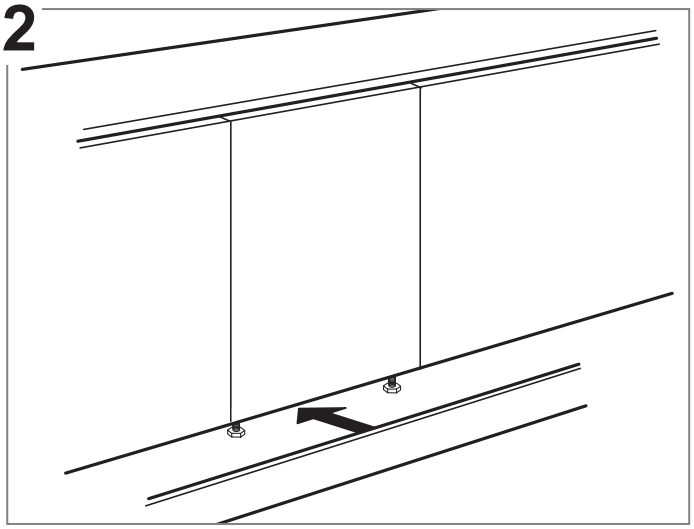

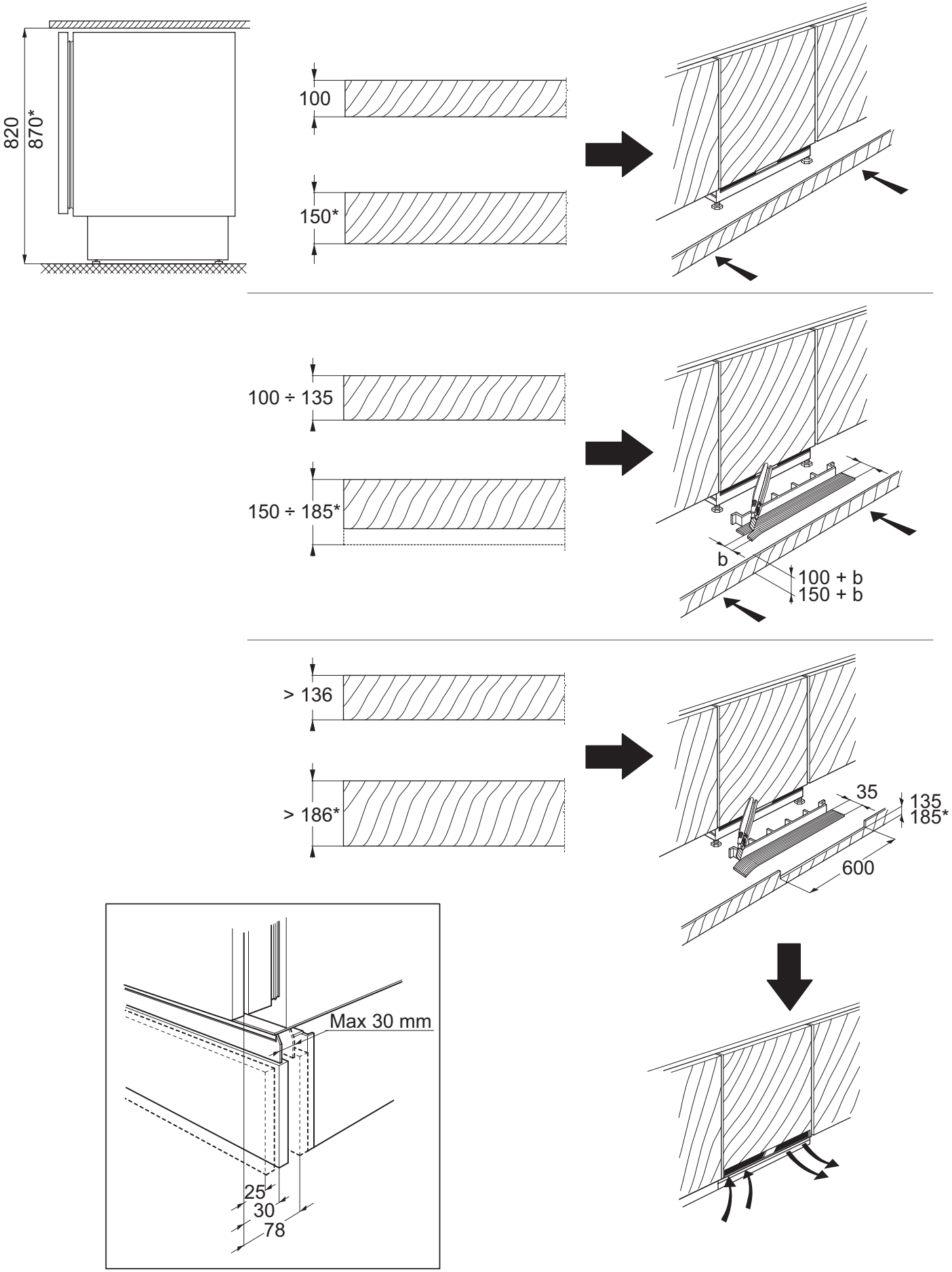
820
870*
100
150*
100 ÷ 135
150 ÷ 185*
b
100 + b
150 + b
> 136
> 186*
35
135
185*
600
Max 30 mm
25
30
78

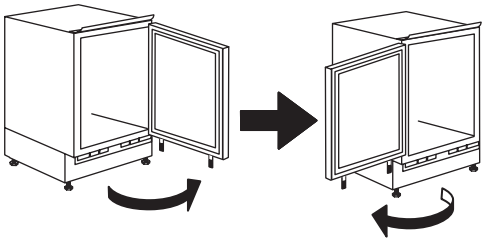

1

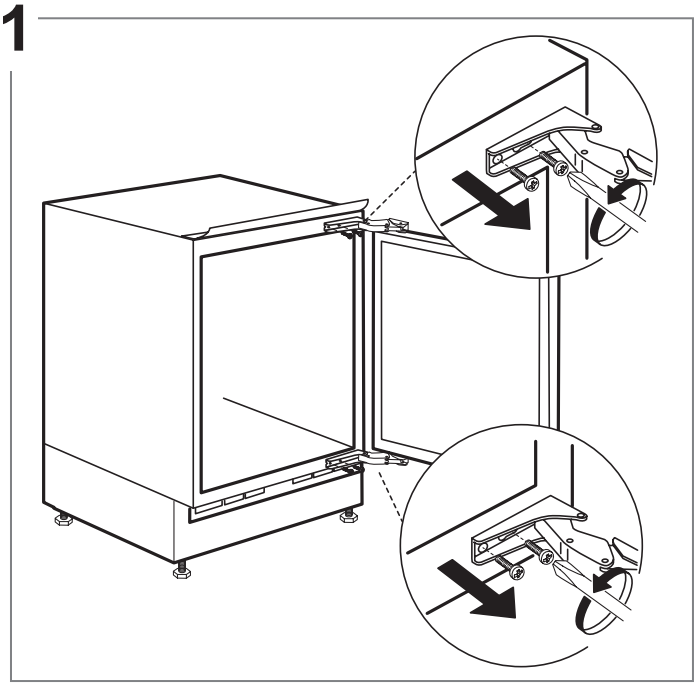

2

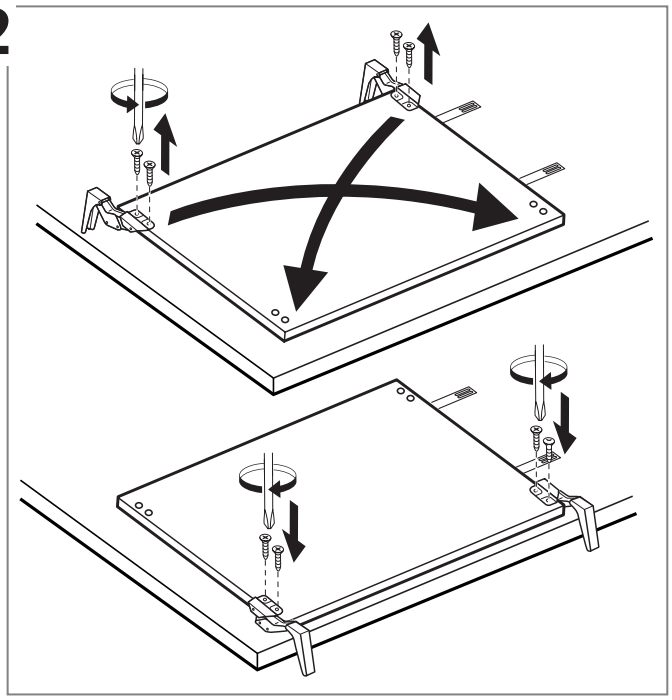

3

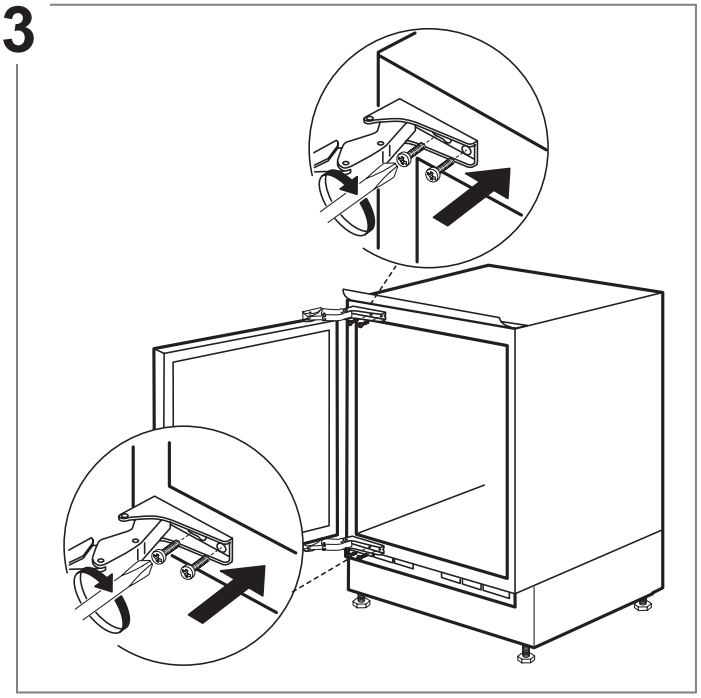

4

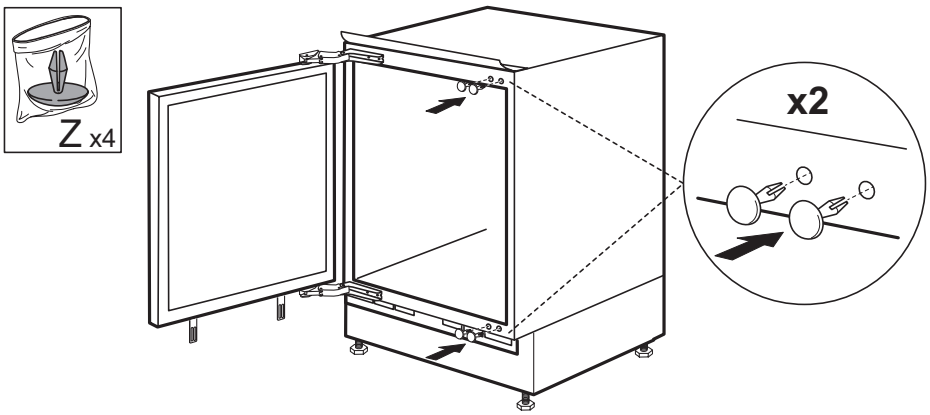

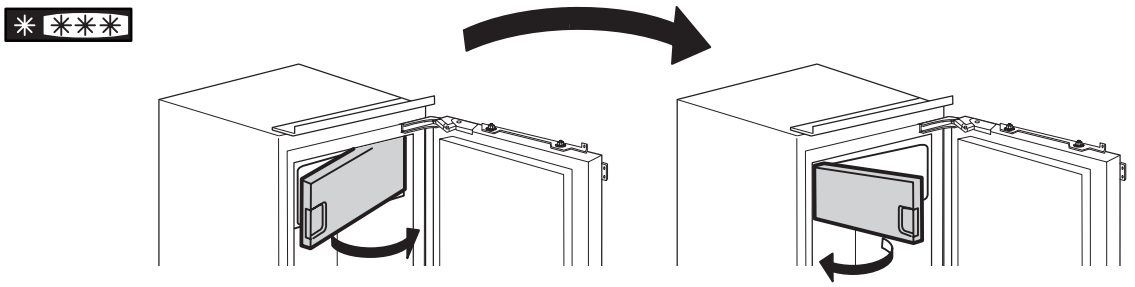

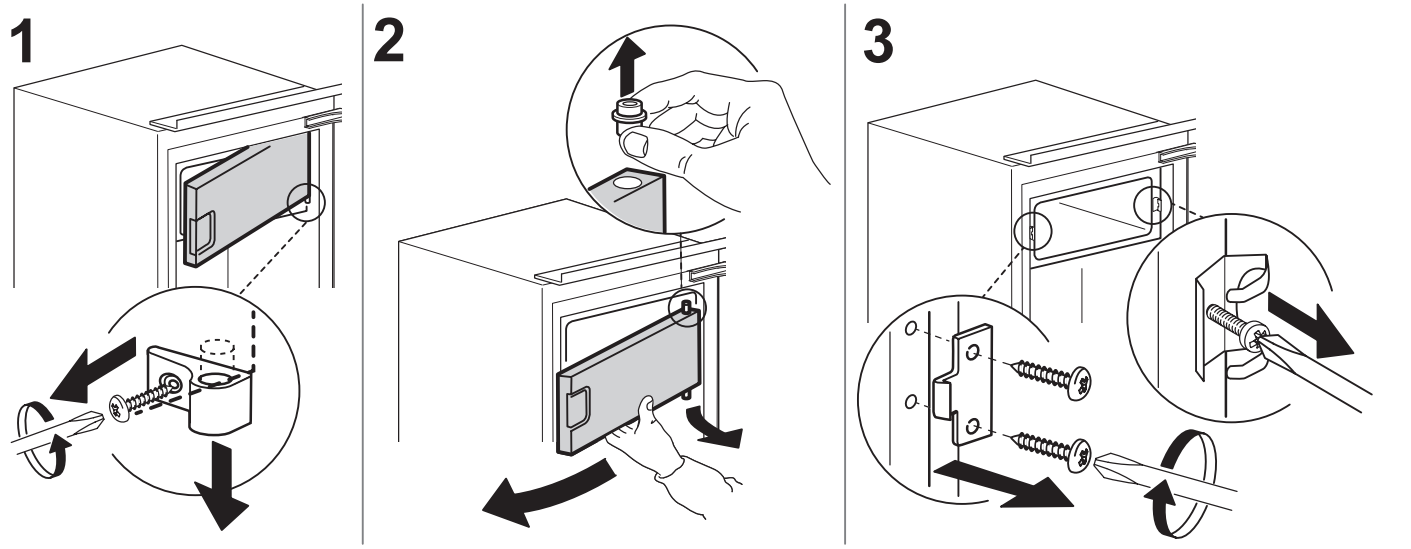
1
2
3

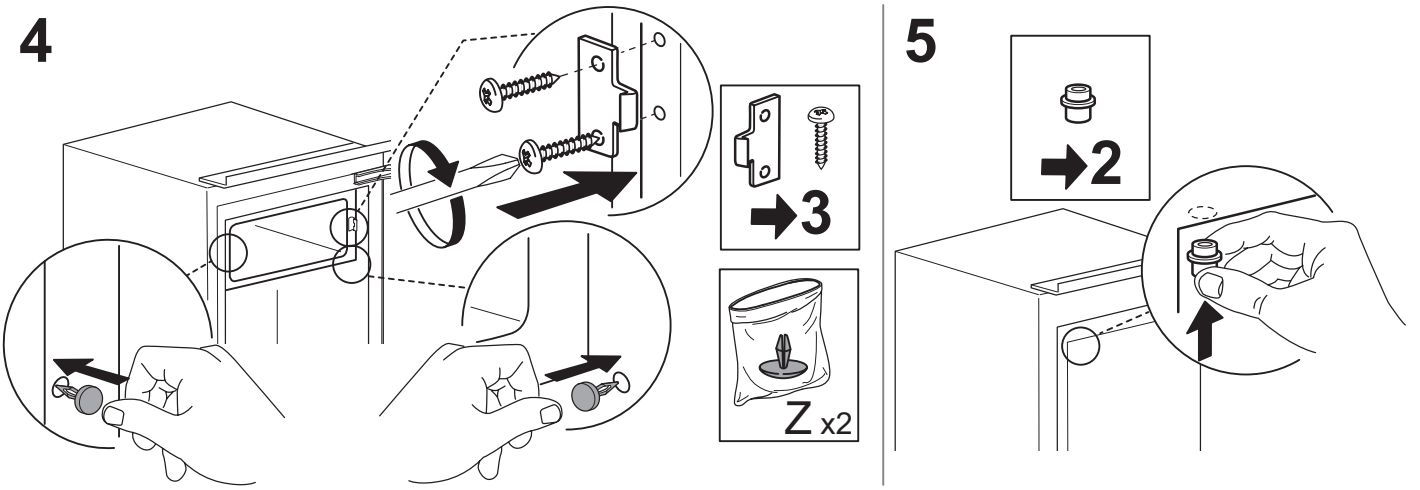
4
3
Z x2
5
2

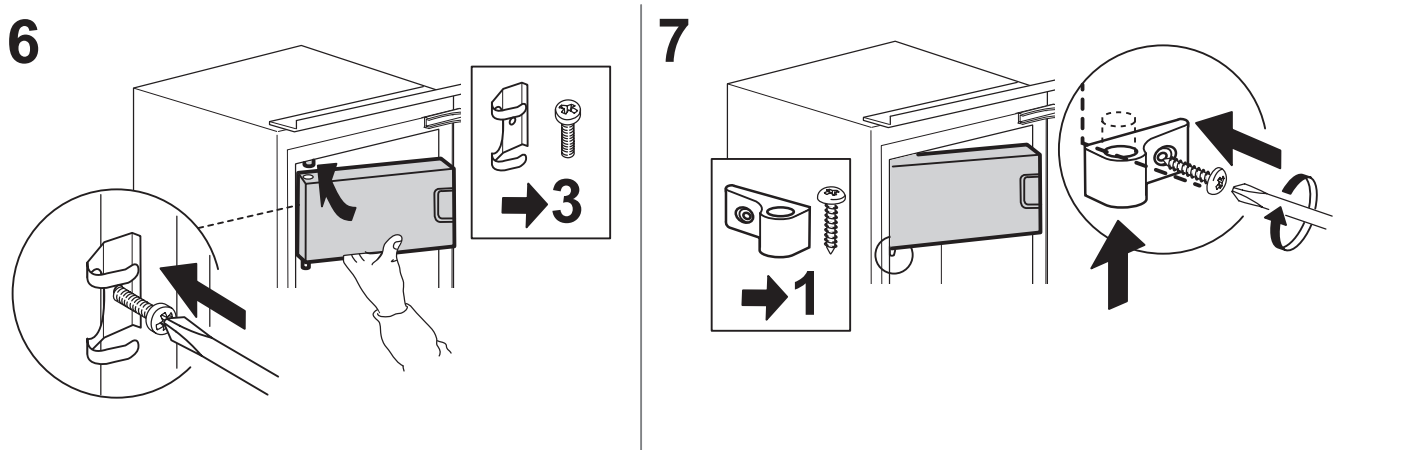
6
3
7
1