CID 641 B B

12NC: F104130

GTIN (EAN) code: 5054645041305

Hotpoint

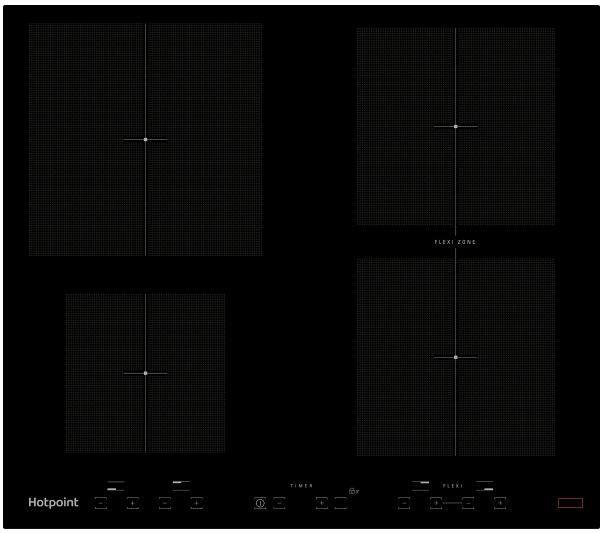

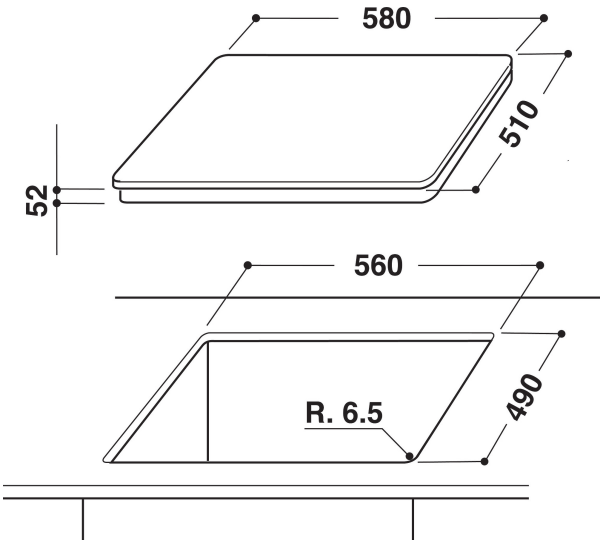

MAIN FEATURES

Product group	Hob
Construction type	Built-in
Type of control	Electronic
Type of control settings	-
Number of gas burners	0
Number of electric cooking zones	4
Number of electric plates	0
Number of radiant plates	0
Number of halogen plates	0
Number of induction plates	4
Number of electric warming zones	0
Location of control panel	Front
Basic surface material	Ceramic Glass
Main colour of product	Black
Electrical connection rating (W)	7200
Gas connection rating (W)	0
Gas type	N/A
Current (A)	31,3
Voltage (V)	230
Frequency (Hz)	50/60
Length of Electrical Supply Cord (cm)	120
Plug type	No
Gas connection	N/A
Width of the product	580
Height of the product	56
Depth of the product	510
Minimum niche height	30
Minimum niche width	560
Niche depth	490
Net weight (kg)	8
Automatic programmes	No

TECHNICAL FEATURES

Power on indicator	Yes
Number of indicators	4
Type of regulation	Induction
Type of lid	Without
Residual heat indicator	Separate
Main on/off switch	Yes
Safety device	-
Timer	Yes

PERFORMANCES

Energy input	Electric