Whirlpool

SENSING THE DIFFERENCE

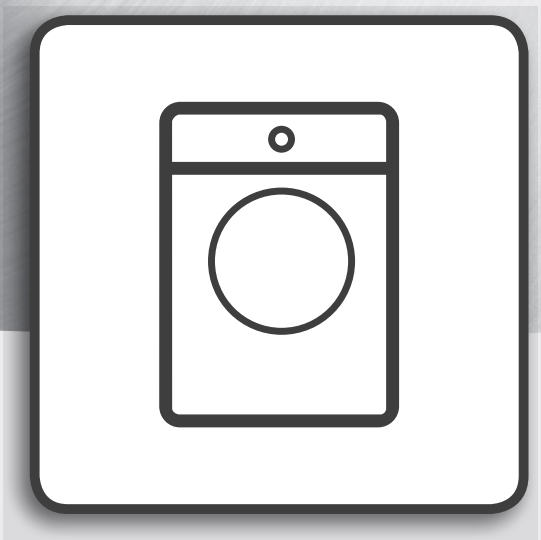

Instructions for use

www.whirlpool.eu/register

ENGLISH 3

ENGLISH
SAFETY AND INSTALLATION INSTRUCTIONS

THANK YOU FOR BUYING AN WHIRLPOOL PRODUCT.
For even more complete user support, register your appliance at **www.whirlpool.eu/register**

Index

Health and Safety guide

SAFETY INSTRUCTIONS 5
IMPORTANT: TO BE READ AND RESPECTED 5
SAFEGUARDING THE ENVIRONMENT 8
DECLARATION OF CONFORMITY 9

Use and Maintenance

PRODUCT DESCRIPTION 10
APPLIANCE 10
CONTROL PANEL 10
DETERGENT DISPENSER 11
TECHNICAL SPECIFICATIONS FOR THE WATER CONNECTION 12
DOOR 12
HOW TO USE THE APPLIANCE 13
FIRST TIME USE 13
DAILY USE 13
HOW TO USE THE WASHER DRYER 14
PROGRAMMES AND OPTIONS 16
FUNCTIONS 19
HINTS AND TIPS 20
ENERGY SAVING TIPS 21

CLEANING AND MAINTENANCE. 22
CLEANING THE WASHER DRYER EXTERNALLY. 22
CHECKING THE WATER INTAKE HOSE. 23
CLEANING THE FILTERS IN THE WATER INTAKE HOSE 24
CLEANING THE DETERGENT DISPENSER. 25
CLEANING THE WATER FILTER / DRAINING THE RESIDUAL WATER. 26
TRANSPORT AND HANDLING. 28
TROUBLESHOOTING 29
DOOR – HOW TO OPEN IT TO REMOVE THE LAUNDRY IN THE EVENT OF A MALFUNCTION. 31
CUSTOMER SUPPORT SERVICE. 32
INSTALLATION GUIDES 33

Health and Safety guide

SAFETY INSTRUCTIONS

IMPORTANT: TO BE READ AND RESPECTED

! This symbol is used to remind you to read this manual.

Before using the appliance carefully read Health and Safety and Use and Care guides.
Keep these instructions close at hand for future reference.

YOUR SAFETY AND SAFETY OF OTHERS IS VERY IMPORTANT.

This manual and the appliance itself provide important safety warnings, to be read and observed at all times.
This is the safety alert symbol.

This symbol alerts you to potential hazards that can kill or hurt you and others.
All safety messages will follow the safety alert symbol or the word "**DANGER**" or "**WARNING**". These words mean:

⚠ DANGER

Indicates a hazardous situation which, if not avoided, will cause serious injury.

⚠ WARNING

Indicates a hazardous situation which, if not avoided, could cause in serious injury.

All safety warnings give specific details of the potential risk presented and indicate how to reduce risk of injury, damage and electric shock resulting from improper use of the appliance. Carefully observe the following instructions.
Failure to observe these instructions may lead to risks. The Manufacturer declines any liability for injury to persons or animals or damage to property if these advices and precautions are not respected.

Very young (0-3 years) and young children (3-8 years) shall be kept away unless continuously supervised.
Children from 8 years old and above and persons with reduced physical, sensory or mental capabilities or lack of experience and knowledge can use this appliance only if they are supervised or have been given instructions on safe appliance use and if they understand the hazards involved. Children shall not play with the appliance.
Cleaning and user maintenance shall not be made by children without supervision.

Remove the transport bolts
The appliance is fitted with transport bolts to avoid any possible damage to the interior during transport. The safety bolts used for transport must absolutely be removed before activating the washer dryer.
After their removal, cover the openings with the 4 enclosed plastic caps.

Never open the door forcibly or use it as a step.

Items that have been soiled with substances such as cooking oil, acetone, alcohol, petrol, kerosene, spot removers, turpentine, waxes and wax removers should be washed in hot water with an extra amount of detergent before being dried in the tumble dryer.
Items such as foam rubber (latex foam), shower caps, waterproof textiles, rubber backed articles and clothes or pillows fitted with foam rubber pads should not be dried in the tumble dryer.

⚠ WARNING

Remove all objects from pockets such as lighters and matches.
Do not use the tumble dryer if chemicals have been used for cleaning.

Oil-soaked items ignite spontaneously, especially when exposed to heat sources such as in a tumble dryer. The items become warm, causing an oxidation reaction in the oil. Oxidation creates heat. If the heat is unable to be dissipated, the resulting overheating could cause the garments to catch fire.Piling, stacking or storing oil-soaked items can prevent heat from escaping and so create a fire hazard.

Do not stop the appliance until the drying cycle has been completed;if this should be necessary, quickly remove all the garments and lay them out in order to facilitate the heat's dissipation.
The last phase of the drying cycle is done without heat (cool down phase), to assure that the laundry stays at a temperature level which is not leading to a damaging of the laundry.

INTENDED USE OF THE PRODUCT

This appliance is designed solely for domestic usage. To aim the appliance as professional use is forbidden. The manufacturer declines all responsibility for inappropriate use or incorrect setting of the controls.

CAUTION : The appliance is not intended to be operated by means of an external timer or separate remote control system.

Do not use the appliance outdoors.
Do not store explosive or flammable substances such as aerosol cans and do not place or use gasoline or other flammable materials in or near the appliance: a fire may break out if the appliance is inadvertently switched on.
This appliance is designed exclusively for domestic use with loads of laundry that can be washed and spun in a washer dryer machines.

INSTALLATION

Installation and repairs must be carried out by a qualified technician, in compliance with the manufacturer's instructions and local safety regulations. Do not repair or replace any part of the appliance unless specifically stated in the user manual.
Children should not perform installation operations. Keep children away during installation of the appliance.
Keep the packaging materials (plastic bags, polystyrene parts, etc.) out of reach of children, during and after the installation of the appliance.

Use protective gloves to perform all unpacking and installation operations.
After unpacking the appliance, make sure that it has not been damaged during transport. In the event of problems, contact the dealer or your nearest Customer Support Service.
The appliance must be handled and installed by two or more persons.
Keep children away during installation of the appliance.

The appliance must be disconnected from the power supply before carrying out any installation operation.
During installation, make sure the appliance does not damage the power cable.
Only activate the appliance when the installation procedure has been completed.

After installation of the device to wait a few hours before starting it, to acclimatise to the environmental conditions of the room.
Do not install your appliance where it may be exposed to extreme conditions, such as: poor ventilation, temperature below 5 °C or above 35 °C.

When installing the appliance make sure that the four feet are stable and resting on the floor, adjusting them as required, and check that the appliance is perfectly level using a spirit level.

In the case of installation on wood or floating floors, position the washer dryer on a plywood panel that has been fixed to the floor, which must be at least 60 x 60 cm in size, and at least 3 cm thick.
Use only new hoses to connect the appliance to the water supply. Used hoses must not be used and should be discarded.
Do not move the washer dryer while holding onto its upper surface.
Connect the water inlet hose(s) to the water supply in accordance with the regulations of your local water company.
For models dedicated only for cold water: Do not connect to the hot water supply.
For models with hot fill: the hot water inlet temperature must not exceed 60 °C.
Make sure that the ventilation openings in the base of your appliance (if available on your model) are not obstructed by a carpet or other material.
The supply water pressure must be in range 0.1 -1 MPa.
The appliance must not be installed in such a way as to impede its door from opening completely (e.g. behind a lockable door, a sliding door, or a door that is hinged on the side opposite to that of the appliance itself).

ELECTRICAL WARNINGS

Make sure the voltage specified on the rating plate

corresponds to that of your home.
For installation to comply with current safety regulations, an omnipolar switch with minimum contact gap of 3mm is required.
Regulation require that the appliance is earthed.
For appliances with fitted plug, if the plug is not suitable for your socket outlet, contact a qualified technician.
Do not use extension leads, multiple sockets or adapters.
Do not connect the appliance to a socket which can be operated by remote control.
The power cable must be long enough for connecting the appliance, once fitted in its housing, to the main power supply.
Do not pull the power supply cable.
If the power cable is damaged it must be replaced with an identical one. The power cable must only be replaced by a qualified technician in compliance with the manufacturer instruction and current safety regulations.
Contact an authorised service centre.
Do not operate this appliance if it has a damaged mains cord or plug, if it is not working properly, or if it has been damaged or dropped. Do not immerse the mains cord or plug in water. Keep the cord away from hot surfaces.
The electrical components must not be accessible to the user after installation.
Do not touch the appliance with any wet part of the body and do not operate it when barefoot.

ELECTRICAL CONNECTIONS FOR GREAT BRITAIN AND IRELAND ONLY

Fuse replacement

If the mains lead of this appliance is fitted with a BS 1363A 13amp fused plug, to change a fuse in this type of plug use an A .S .T .A . approved fuse to BS 1362 type and proceed as follows:

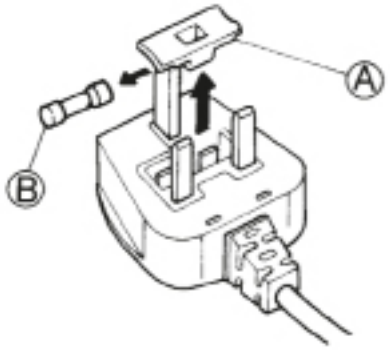

1. Remove the fuse cover (A) and the fuse (B).
2. Insert the 13A replacement fuse inside the cover.
3. Insert both into the plug.

Important:
The cover must be re-installed after having replaced the fuse;if lost, the plug cannot be used and must be replaced.
Correct replacement are identified by the colour insert or the colour embossed in words on the base of the plug.
Replacement fuse covers are available from your local electrical store.

For the Republic of Ireland only

The information given in respect of Great Britain will frequently apply, but a third type of plug and socket is also used, the 2-pin, side earth type.

Socket outlet / plug (valid for both countries)

If the fitted plug is not suitable for your socket outlet, contact Customer Support for further instruction. Do not replace the plug on your own.This operation must only be carried out by a qualified technician, in compliance with the manufacturer's instructions and the current safety regulations.

CORRECT USE

Do not exceed the maximum load allowed. Check the maximum load allowed in the programme chart.
Close the water tap when the washer dryer is not in use.
Do not use any solvents (e.g. turpentine, benzene), detergents containing solvents, scouring powder, glass or general purpose cleaners, and flammable fluids; do not wash fabrics treated with solvents or flammable liquids in the washer dryer.
Do not over-dry the laundry.
Fabric softeners, or similar products, should be used as specified by the fabric softener instructions.
Do not dry unwashed laundry.

CLEANING AND MAINTENANCE

The appliance must be disconnected from the power supply before carrying out any cleaning or maintenance operation.

Never use steam cleaning equipment.

SAFEGUARDING THE ENVIRONMENT

DISPOSAL OF PACKAGING MATERIALS

The packaging material is 100% recyclable and is marked with the recycle symbol (*). The various parts of the packaging must therefore be disposed of responsibly, and in strict compliance with the regulations established by the local authorities.

SCRAPPING OF HOUSEHOLD APPLIANCES

When scrapping the appliance, make it unusable by cutting off the power cable and removing the doors and shelves (if present) so that children cannot easily climb inside and become trapped.
This appliance is manufactured with recyclable (*) or reusable materials. Dispose of it in accordance with local waste disposal regulations.

For further information on the treatment, recovery and recycling of household electrical appliances, contact your competent local authority, the collection service for household waste or the store where you purchase the appliance.

This appliance is marked in compliance with European Directive 2012/19/EU, Waste Electrical and Electronic Equipment (WEEE).
By ensuring this product is disposed of correctly, you will help prevent potential negative consequences for the environment and human health, which could otherwise be caused by inappropriate waste handling of this product.

The symbol (*) on the product or on the accompanying documentation indicates that it should not be treated as domestic waste but must be taken to an appropriate collection centre for the recycling of electrical and electronic equipment.

ENERGY SAVING TIPS

Always dry a full load, depending on the type of laundry and the programme/ drying time. For more detailed information, see the programme chart.

By preference use the maximum spin speed allowed by your appliance, since draining the water mechanically requires less energy. You will save time and energy when running your drying cycle.

Always select the correct programme/drying time for the load in order to obtain the desired drying results.

Select the 'Gentle' option only in case of drying small loads.

When drying cotton garments, for example, load the garments to be ironed and those not to be ironed together. Begin by setting the programme or the drying time for the garments to be ironed; at the end of the cycle, remove the laundry to be ironed, then dry the remainder of the load by setting the programme for the garments that do not need to be ironed.

DECLARATION OF CONFORMITY

"This appliance has been designed, constructed and distributed in compliance with the safety requirements of European Directives :
-2006/95/EC Low Voltage Directive
-2004/108/EC Electromagnetic Compatibility Directive".

PRODUCT DESCRIPTION

APPLIANCE

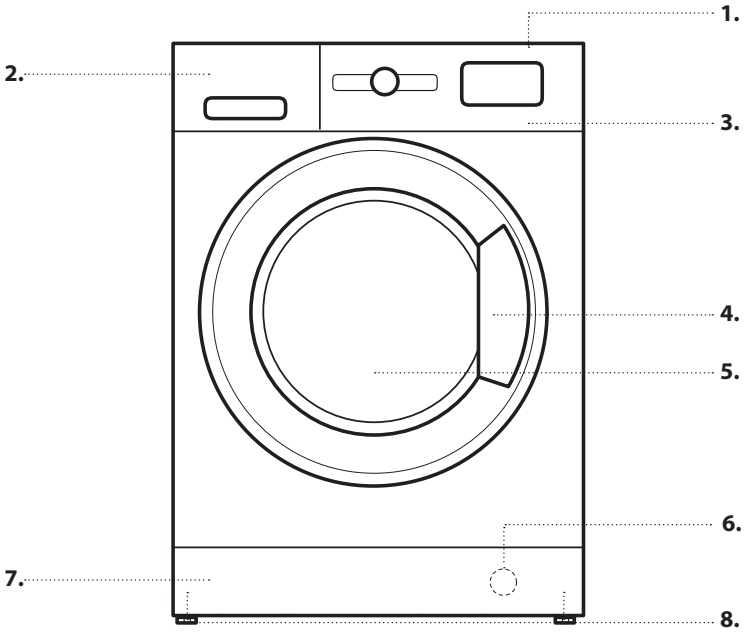

1. Top
2. Detergent dispenser
3. Control Panel
4. Lid handle
5. Door
6. Water filter - behind kick panel
7. Removable kick panel
8. Adjustable feet (2)

CONTROL PANEL

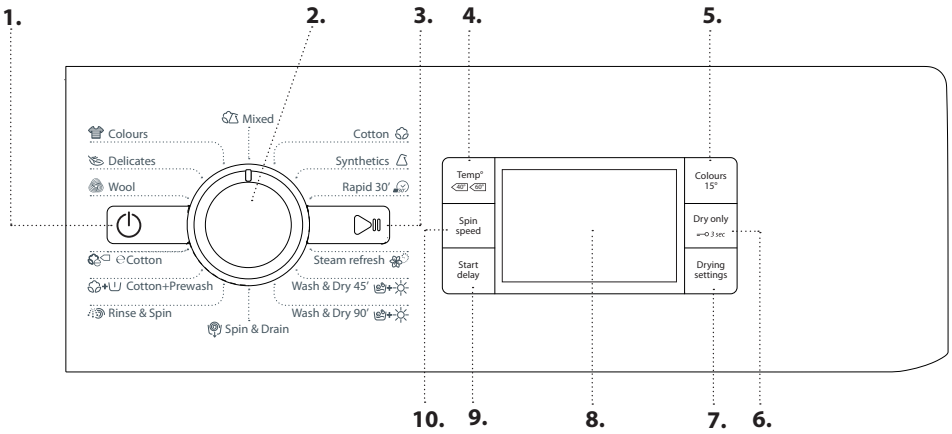

1. On/Off button
2. Programme selector
3. Start/Pause button
4. Temperature button
5. Colours 15°C button
6. Dry Only Button / Lock button
7. Drying settings button
8. Display
9. Start delay button
10. Spin speed button

Whirlpool

DETERGENT DISPENSER

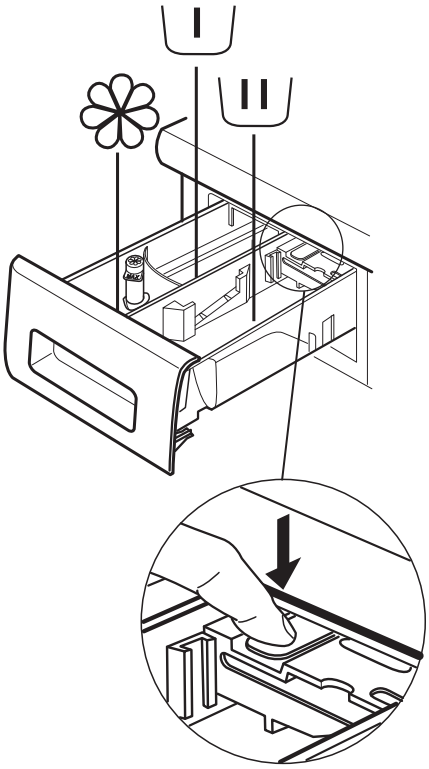

Prewash Compartment
- Detergent for prewash

Main Wash Compartment
- Detergent for the main wash
- Stain remover
- Water softener

Softener compartment
- Softener
- Liquid starch

Pour softener or starch solution into the compartment without exceeding the "max" level.

Release button
(press to remove tray for cleaning).

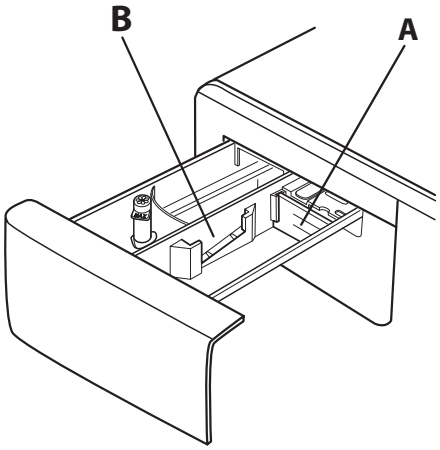

Preferably use the partition **A** when washing with a liquid detergent for washing, to ensure that the correct quantity of detergent is used (the partition is included in the bag containing the instructions).
Move the partition into slot **B** when using detergent powder.

TECHNICAL SPECIFICATIONS FOR THE WATER CONNECTION

INPUT WATER	Cold
WATER TAP	Threaded attachment for 3/4" flexible hose
MINIMUM WATER INTAKE PRESSURE	100 kPa (1 bar)
MAXIMUM WATER INTAKE PRESSURE	1000 kPa (10 bar)

DOOR

To open the door, pull the handle.

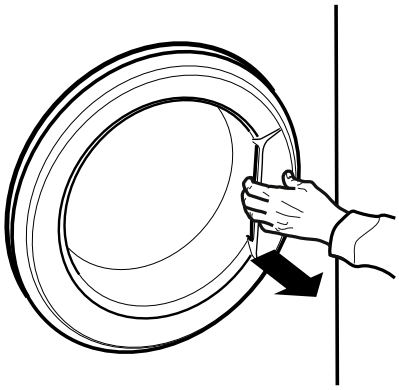

To close the door, push on the handle until it clicks.

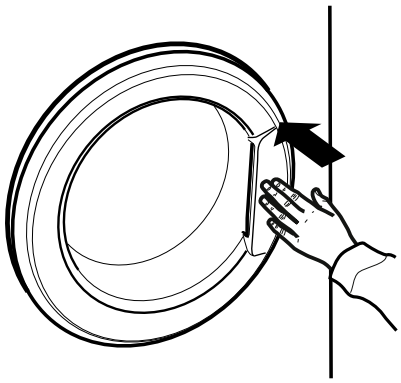

HOW TO USE THE APPLIANCE

FIRST TIME USE

Remove any manufacturing debris:

- Select the *"Cotton"* programme with a temperature setting of 90 °C.
- Pour a small quantity of detergent powder into the main wash compartment of the detergent dispenser (maximum 1/3 of the quantity the detergent manufacturer recommends for lightly soiled laundry).

- Start the programme **without loading the washer dryer machine** (with empty drum).

DAILY USE

PREPARING THE LAUNDRY

1. EMPTY POCKETS

- Coins, paper clips, etc. could damage the load and the washer dryer's components.
- Tissues will break down during the wash cycle, and the fragments will have to be subsequently removed by hand.

2. CLOSE ALL ZIPPERS, BUTTONS, AND HOOKS. TIE ALL RIBBONS OR BELTS.

- Insert the smaller garments (e.g. nylon hosiery, belts, etc.) and garments with hooks (e.g. braziers) into a fabric bag or a pillowcase with a zipper. Remove any rings from curtains, or else place the curtains inside a fabric bag together with the rings.

3. FABRIC TYPE / SYMBOL ON THE WASH LABEL

Cotton, mixed fabrics, synthetics, wool, garments to be washed by hand.

- Colour
  separate the white garments from the coloured garments. Wash any new coloured garments separately.
- Size
  Wash items of different sizes in the same load to improve washing efficacy and weight distribution inside the drum.
- Delicates
  Wash delicate garments separately; these garments require special handling.

HOW TO USE THE WASHER DRYER

1. LOADING LAUNDRY.

- Prepare the laundry, following the recommendations given in the section “HINTS AND TIPS” - Open the Door and load the laundry without exceeding the maximum load capacities indicated in the section titled "*Programmes and Options*".

- Close the door, pressing until the latch audibly locks, and check that there is no laundry trapped between the door glass and the rubber seal.

2. OPEN THE WATER TAP.

Check that the washing machine is properly connected to the water mains. Open the water tap.

3. SWITCHING ON THE WASHER DRYER.

Press button ⏻; the indicator light ⏯ will flash slowly.

4. SELECT THE PROGRAMME AND CUSTOMISE THE CYCLE.

This appliance allows for the following functions to be performed:

- Wash only
- Wash and dry
- Dry only

Wash only

Select the desired programme using the PROGRAMME selector. The duration of the wash cycle is shown on the display. The washer dryer machine automatically displays the maximum temperature and spin speed settings possible for the selected programme. Adjust the temperature and/or spin speed settings if needed with the relative buttons.

- Press the “Temp°” button to progressively lower the temperature setting until cold wash has been set (“**- -**“ will be shown on the display).
- Press the “Spin speed” button to progressively decrease the spin speed until the spin cycle is turned off (“0” will be shown on the display). Pressing the button again sets the highest possible setting.

Select the required options (if necessary).

- Press the button to select the option; the respective button lamp illuminates.
- Press the button again to cancel the option; the lamp extinguishes.

! If the selected option is not compatible with the set programme, an error alarm will sound and the indicator light will flash three times.The option is not selected.

Wash and dry

If you want to wash and dry a load without any interruption between the wash and dry cycles, it is necessary to make sure that the load to be washed is within the maximum load drying limit for the selected programme *(see “Max. drying load”* in the chapter titled *“Programmes and Options”)*.

1. Follow the instructions given in the paragraph “Wash Only” to select and, if necessary, customise the required programme.
2. Select the desired drying mode by pressing the “Drying settings” button. Two drying modes are available: automatic or timer.

- *Automatic drying with selectable levels:*

In automatic drying mode, the washer dryer machine dries the laundry until the set level of dryness is reached. As soon as the "Drying settings" button has been pressed, the washer dryer automatically selects the maximum drying level compatible with the selected programme.Press the button again to reduce the drying level.

The following levels are available:
Wardrobe : laundry is completely dry and ready to be put away in the wardrobe without ironing.
Hanger : laundry is left slightly damp to minimise creasing. Garments must be hung to air dry completely.
Iron : garments are left reasonably damp to make ironing easier.

- *Timer drying mode:*

If you want to set a timed drying cycle, press the “Drying settings” button repeatedly. After all the automatic drying levels have been displayed, continue pressing the “Drying settings” button until the desired time is displayed. Values from 210 to 30 minutes are settable.

If instead you want to wash and dry a load of laundry that exceeds the maximum drying load *(see “Max. drying load”* in the chapter titled *“Programmes and Options”)*, a number of garments will have to be removed at the end of the wash cycle before proceeding with the drying cycle. Proceed as follows:

1. Follow the instructions given in the paragraph “Wash Only” to select and, if necessary, customise the required programme.
2. Do not include a drying cycle.
3. Once the washing cycle is finished, open the door and remove a few garments to reduce the load. Now follow the instructions for “Dry only”. N.B.: always allow a cooling down period after drying before opening the door.

When using the two preset cycles “Wash & Dry 45’” and “Wash & Dry 90’”, it is not necessary to select and start a drying cycle.

Dry only
This function is used to simply dry a wet load washed previously in the washer dryer or by hand.

1. Select a programme that's compatible with the type of garments to be dried (e.g. select cotton if you want to dry a load of wet cotton garments).
2. Press the “Dry only” button to perform the drying cycle alone, without performing the wash cycle.
3. Select the desired drying mode by pressing the “Drying settings” button.Two drying modes are available: automatic or timer.

- *Automatic drying with selectable levels:*
In automatic drying mode, the washer dryer machine dries the laundry until the set level of dryness is reached. As soon as the "Drying settings" button has been pressed, the washer dryer automatically selects the maximum drying level compatible with the selected programme. Press the button again to reduce the drying level.
The following levels are available:
Wardrobe : laundry is completely dry and ready to be put away in the wardrobe without ironing.
Hanger : laundry is left slightly damp to minimise creasing. Garments must be hung to air dry completely.
Iron : garments are left reasonably damp to make ironing easier.

- *Timer drying mode:*
If you want to set a timed drying cycle, press the “Drying settings” button repeatedly. After all the automatic drying levels have been displayed, continue pressing the “Drying settings” button until the desired time is displayed. Values from 210 to 30 minutes are settable.
N.B.: always allow a cooling down period after drying before opening the door.

5. USING THE CORRECT AMOUNT OF DETERGENT.

Extract the dispenser and pour the detergent into the appropriate trays as explained in the section titled “*Detergent Dispenser*”. Only if you want to perform a wash or wash + dry programme.

6. DELAYING THE START OF A PROGRAMME.

If you want to delay the programme's activation, see the section titled*“Programmes and Options”*.

7. STARTING A PROGRAMME.

Press the START/PAUSE button. The relative indicator lamp illuminates, the door locks and the door open symbol extinguishes.
To change a programme while a cycle is in progress, set the washer dryer to pause mode by pressing the START/PAUSE button (the START/PAUSE indicator light will slowly flash with an amber colour); next, select the desired cycle and press the START/PAUSE button again.
To open the door while a cycle is in progress, press the START/PAUSE button; if the symbol turns on, the door can be opened. Press the START/PAUSE button again to resume the programme from the point at which it was interrupted.

8. CANCELLING A PROGRAMME IN PROGRESS (IF NECESSARY)

Press and hold the button until the washer dryer stops.
If the water level and temperature are low enough, the door unlocks and may be opened. The door remains locked if there is water in the drum. To unlock the door, switch the washer dryer on, select the SPIN & DRAIN programme and turn the spin function off by setting the spin speed to 0. The water is emptied and the door unlocks at the end of the programme.

9. SHUT OFF THE WASHER DRYER AT THE END OF THE PROGRAMME.

At the end of the cycle, the message “END” is shown on the display. The door can only be opened once the symbol turns on. Check that the door unlocked symbol is lit, then open the door and take out the laundry.
Press to switch the washer dryer off. To save energy, if the washer dryer is not switched off manually with the button, it turns off automatically approximately 30 minutes after the end of the programme.
Leave the door slightly ajar in order to allow the inside of the washer dryer to dry.

PROGRAMMES AND OPTIONS

In order to select the most suitable programme for the type of load in question, refer to the instructions indicated on the garments' wash labels.

PROGRAMME	*Wash type and recommendations*	*Wash symbols*	*Settings*
COTTON	For washing normally to heavily soiled towels, underwear, table and bed linen etc. in resilient cotton and linen.		MAX. WASH LOAD **max** MAX. DRYING LOAD **7 kg** TEMPERATURE **Cold - 90 °C** MAX. SPIN SPEED **max** SELECTABLE OPTIONS **Start Delay, Colours 15°, Dry Only**
SYNTHETICS	For washing normally soiled garments made from synthetic fibres (such as polyester, polyacrylic, viscose etc.) or cotton/synthetic blends.		MAX. WASH LOAD **5 kg** MAX. DRYING LOAD **5 kg** TEMPERATURE **Cold - 60 °C** MAX. SPIN SPEED **1000** SELECTABLE OPTIONS **Start Delay, Colours 15°, Dry Only**
RAPID 30'	For washing lightly soiled garments quickly: this cycle lasts only 30 minutes, saving time and energy. Maximum load 4 Kg.		MAX. WASH LOAD **4 kg** MAX. DRYING LOAD **-** TEMPERATURE **Cold - 30 °C** MAX. SPIN SPEED **800** SELECTABLE OPTIONS **Start Delay, Colours 15°**
STEAM REFRESH	For refreshing garments, neutralised unpleasant odours and relaxing the fibres by delivering steam into the drum. The garments will be damp at the end of the cycle.		MAX. WASH LOAD **2 kg** MAX. DRYING LOAD **-** TEMPERATURE **-** MAX. SPIN SPEED **-** SELECTABLE OPTIONS **Start Delay**
WASH&DRY 45'	For washing and drying lightly soiled garments (Cotton and Synthetics) quickly. This cycle washes and dries a laundry load of up to 1 Kg in just 45 minutes.		MAX. WASH LOAD **1 kg** MAX. DRYING LOAD **1 kg** TEMPERATURE **30 °C** MAX. SPIN SPEED **max** SELECTABLE OPTIONS **Start Delay**
WASH&DRY 90'	For washing and drying cotton and synthetic fibre garments quickly. This cycle washes and dries a laundry load of up to 2 Kg in just 90 minutes.		MAX. WASH LOAD **2 kg** MAX. DRYING LOAD **2 kg** TEMPERATURE **30 °C** MAX. SPIN SPEED **1200** SELECTABLE OPTIONS **Start Delay**

PROGRAMME	*Wash type and recommendations*	*Wash symbols*	*Settings*
SPIN & DRAIN	Spins the load then empties the water. For resilient garments.		MAX. WASH LOAD **max** MAX. DRYING LOAD **7 kg** TEMPERATURE **-** MAX. SPIN SPEED **max** SELECTABLE OPTIONS **Start Delay, Dry Only**
RINSE & SPIN	Rinses and then spins. For resilient garments.		MAX. WASH LOAD **max** MAX. DRYING LOAD **7 kg** TEMPERATURE **-** MAX. SPIN SPEED **max** SELECTABLE OPTIONS **Start Delay, Dry Only**
COTTON + PREWASH	For washing heavily soiled towels, underwear, table and bed linen etc. in resilient cotton and linen where a prewash is required. Use only powder detergent in the "Main wash compartment".		MAX. WASH LOAD **max** MAX. DRYING LOAD **7 kg** TEMPERATURE **Cold - 90 °C** MAX. SPIN SPEED **max** SELECTABLE OPTIONS **Start Delay, Colours 15°, Dry Only**
COTTON (1-2)	For washing normally soiled cotton garments. At 60 °C, this is the standard cotton programme and the most efficient in terms of water and energy consumption.		MAX. WASH LOAD **max** MAX. DRYING LOAD **7 kg** TEMPERATURE **Cold - 60 °C** MAX. SPIN SPEED **max** SELECTABLE OPTIONS **Start Delay, Dry Only**
WOOL WOOL HAND WASH SAFE	*Woolmark Apparel Care - Green:* The wool wash cycle of this machine has been approved by The Woolmark Company for the washing of wool garments labelled as "hand wash" provided that the products are washed according to the instructions on the garment label and those issued by the manufacturer of this washer dryer. (M1135)		MAX. WASH LOAD **2,5 KG** MAX. DRYING LOAD **2,5 kg** TEMPERATURE **Cold - 40 °C** MAX. SPIN SPEED **800** SELECTABLE OPTIONS **Start Delay, Colours 15°, Dry Only**
DELICATES	For washing particularly delicate garments. Preferably turn garments inside out before washing.		MAX. WASH LOAD **1 kg** MAX. DRYING LOAD **1 kg** TEMPERATURE **Cold - 30 °C** MAX. SPIN SPEED **-** SELECTABLE OPTIONS **Start Delay, Colours 15°, Dry Only**

PROGRAMME	*Wash type and recommendations*	*Wash symbols*	*Settings*
COLOURS	For washing coloured cotton garments. This programme is optimised to keep colours bright even after repeated washing.		MAX. WASH LOAD **max** MAX. DRYING LOAD **7 kg** TEMPERATURE **Cold - 40 °C** MAX. SPIN SPEED **max** SELECTABLE OPTIONS **Start Delay, Colours 15°, Dry Only**
MIXED	For washing lightly to normally soiled resilient garments in cotton, linen, synthetic fibres and mixed fibres.		MAX. WASH LOAD **5,5 KG** MAX. DRYING LOAD **5.5 kg** TEMPERATURE **Cold - 40 °C** MAX. SPIN SPEED **1000** SELECTABLE OPTIONS **Start Delay, Colours 15°, Dry Only**

1) Test programme in compliance with standard EN 50229 (Wash): select the "Cotton" programme with a temperature of 60°C.
2) Long cotton programme: set the "Cotton " programme with a temperature of 40°C.

Test programme in compliance with standard EN 50229 (Drying): the greater load (7kg) must be dried by selecting the dryness level.
The remainder of the load must be dried by selecting the dryness level: the load must consist of 3 sheets and 7 pillowcases.

OPTIONS

! If the selected option is not compatible with the set programme, an error alarm will sound and the indicator light will flash three times. The option is not selected.

COLOURS 15°

This option helps protect colours by washing in cold water (15 °C). This option uses less energy to heat the water while still offering satisfactory wash results.
Suitable for lightly soiled, unstained garments, depending on the programme previously selected.
Note: selecting this option together with the "MIXED" programme offers wash results comparable to a 40 °C cycle at just 15 °C.

START DELAY

To set the selected programme to start at a later time, press the button to set the desired delay time. The symbol lights on the display when this function is enabled. To cancel the delayed start, press the button again until the value "0" is shown on the display.

Whirlpool

FUNCTIONS

ON/OFF

To turn on the washer dryer: press this button until the Start/Pause button turns on.

To cancel a programme in progress: Press and hold the button until the washer dryer stops.

To shut off the washer dryer at the end of the programme: press the button until the lights turn off.

SELECTOR DIAL

- Allows for the programmes to be selected.
- Turn the dial to make a selection

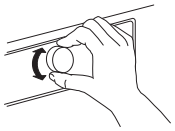

START/PAUSE

- For starting the programme after having selected the settings
- For pausing a programme in progress
- For resuming a programme that was previously paused

LOCK BUTTON

- To lock the control panel, hold down the “Dry only” button for about 3 seconds. The symbol will light up on the display to indicate that the control panel has been locked (with the exception of the button). This prevents unintentional changes to programmes, especially with children near the machine.

If any attempt is made to use the control panel, the symbol on the display will begin flashing. To unlock the control panel, hold down the “Dry only” button for about 3 seconds.

HINTS AND TIPS

RULES FOR SEPARATING LAUNDRY

- Fabric type / indications on label (cotton, mixed fibres, synthetic, wool, handwash items)
- Colour (separate coloured garments from whites, wash new coloured items separately)
- Size (wash items of different sizes in the same load to improve washing efficacy and weight distribution in the drum)
- Delicates (place small items – such as nylon stockings – and garments with clasps – such as braziers – in a laundry bag or in a pillow case with a zip).

EMPTY POCKETS

- Objects like coins or safety pins can damage the laundry as well as the washer dryer's drum.

WASH SYMBOLS ON GARMENT LABELS

The value given in the tub symbol is the maximum temperature possible for washing the garment.

- Normal mechanical action
- Reduced mechanical action
- Much reduced mechanical action
- Hand wash only
- Do not wash

CLEAN THE WATER FILTER REGULARLY

- This is needed to prevent the filter from blocking and preventing the water from draining correctly.

SAVING ENERGY AND PROTECTING THE ENVIRONMENT

- Keeping within the load limits indicated in the programme chart will optimise energy, water and detergent consumption and reduce washing times.
- Do not exceed the detergent quantities recommended by the detergent manufacturer.
- Save energy by using a 60 °C instead of a 90 °C wash programme, or by using a 40 °C instead of a 60 °C wash programme. We recommend using the "e Cotton" 60 °C programme for cotton garments, which is longer, but uses less energy.
- To save energy and time when washing and drying, select highest spin speed available for the programme to reduce the residual water remaining in the garments at the end of the wash cycle.

ENERGY SAVING TIPS

- Keeping within the load limits indicated in the programme chart will optimise energy, water, and detergent consumption, and will reduce washing times.
- Only use the “Prewash” programme for heavily soiled laundry.
- Pretreat any stains with an appropriate stain remover, or else dampen any dried-on stains with water prior to washing, as this will reduce the need to use a high temperature watch programme.
- In order to save energy, use a 60 °C wash programme rather than a 95 °C programme, or else use a 40 °C programme instead of a 60 °C programme. The 60 °C “e Cotton” programme is recommended for cotton laundry.
- In order to save time and energy, be sure to select a high spin speed in order to reduce the amount of water remaining in the garments before using a dryer.
- Use the “Colours 15°” option for lightly soiled coloured garments; this will reduce the amount of energy used to heat the water.

CLEANING AND MAINTENANCE

⚠ WARNING

Be sure to turn off the washer dryer and disconnect it from its electrical power supply before performing any cleaning or maintenance operations.

Never use flammable liquids to clean the washer dryer.

CLEANING THE WASHER DRYER EXTERNALLY

Clean the washer dryer's external parts using a soft damp cloth.

Do not use generic detergents, glass detergents, abrasive powders, or other similar products to clean the control panel, as these could damage the printed elements.

CHECKING THE WATER INTAKE HOSE

Periodically check the integrity of the water intake hose. If it is found to be damaged, contact Customer Support or an authorised dealer in order to obtain a replacement hose.
Based on the type of hose:

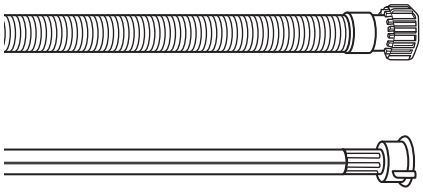

If the water intake hose has a transparent cover, periodically check to make sure that there are no areas where the colour is more pronounced.In such cases, the hose may have a leak and may need to be replaced.

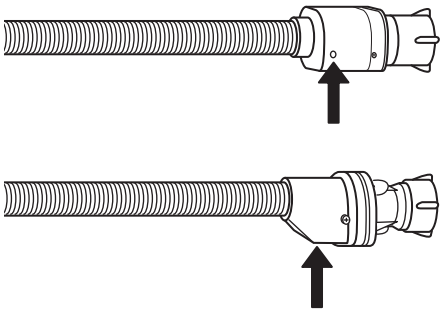

For flood protection hoses: check the safety valve's inspection window (see the arrow). If it's red, this means that the flood protection function has been engaged; in this case, the hose will have to be replaced with a new one. In order to detach the hose, press the release button (if present) and unscrew the hose.

CLEANING THE FILTERS IN THE WATER INTAKE HOSE

1. Close the water tap and unscrew the intake hose.

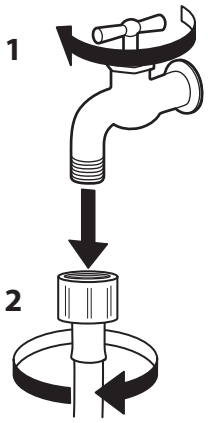

2. Thoroughly clean the mesh filter at the end of the hose using a brush.

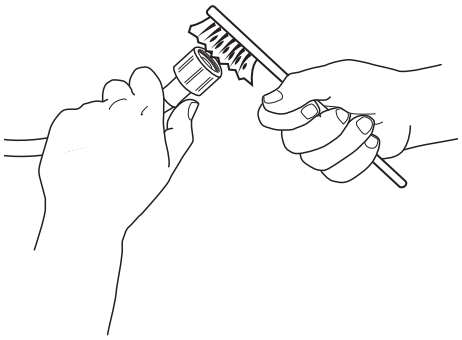

3. At this point, manually unscrew the intake hose from the back of the washer dryer. Using pliers, extract the mesh filter from the valve on the back of the washer dryer and clean it.

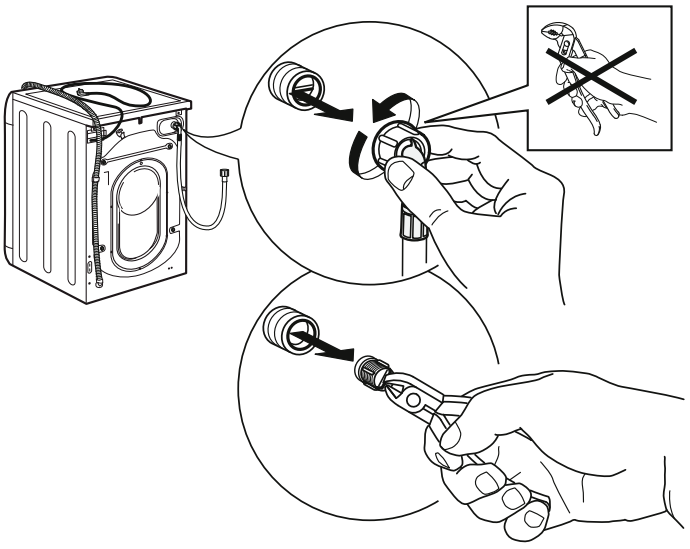

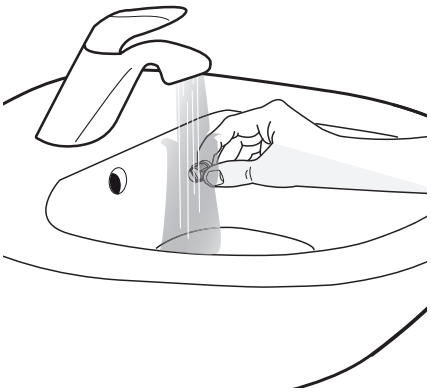

4. Re-insert the mesh filter. Reconnect the intake hose to the water tap and the washer dryer. Do not use tools to connect the intake hose. Open the water tap and check to make sure that all the connections have been tightened properly.

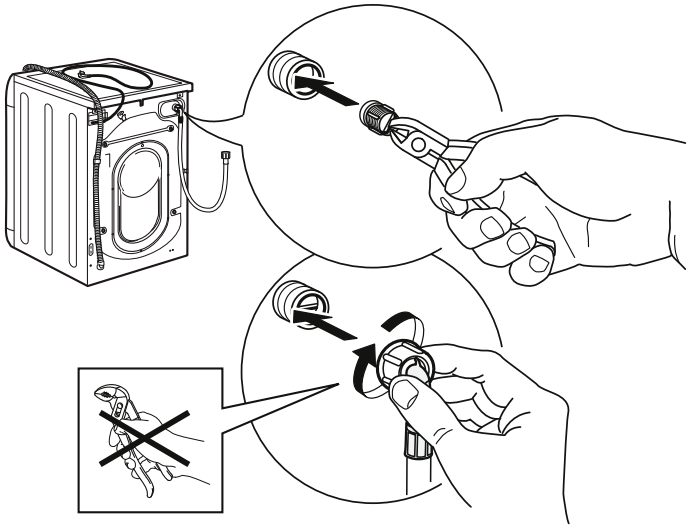

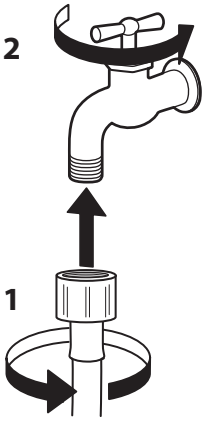

Whirlpool

CLEANING THE DETERGENT DISPENSER

1. Remove the detergent dispenser by pressing the release button and pulling on the dispenser at the same time.

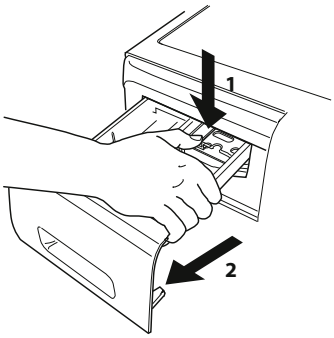

2. Remove the insert from the fabric softener compartment.

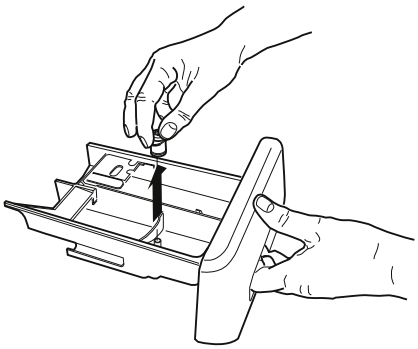

3. Wash the components under running water, taking care to remove all the detergent and fabric softener residues.

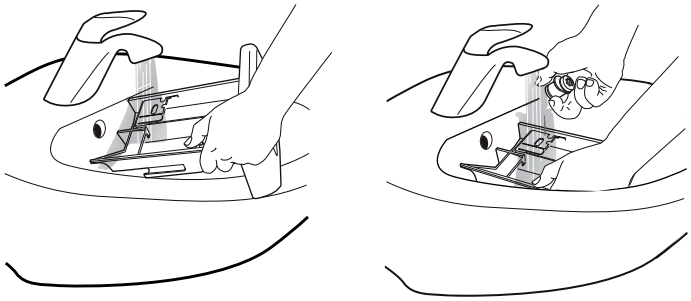

4. Dry with a soft cloth.

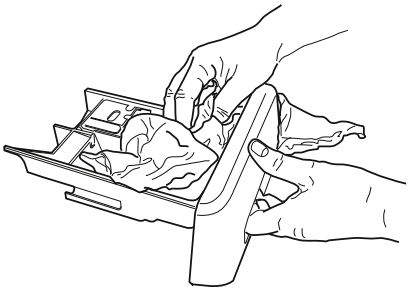

5. Re-install the detergent dispenser and close it.

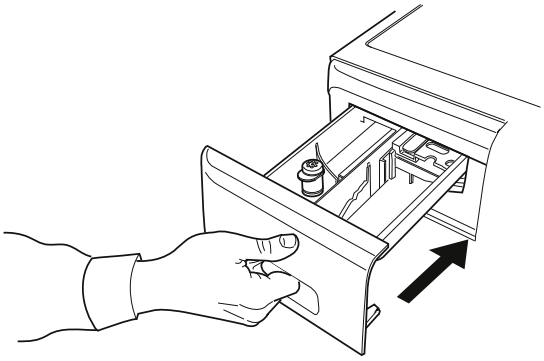

Whirlpool

CLEANING THE WATER FILTER / DRAINING THE RESIDUAL WATER

⚠ WARNING

Make sure that the washer dryer has been shut off and disconnected from its electrical power supply before cleaning the water filter or draining the residual water.If a high temperature wash programme has recently been used, wait for the water to cool before draining it.
The water filter should be cleaned regularly in order to prevent water from remaining inside the appliance after wash cycles due to filter obstructions.

1. Remove the kick panel: Using a screwdriver, do that which is shown in the following figure.

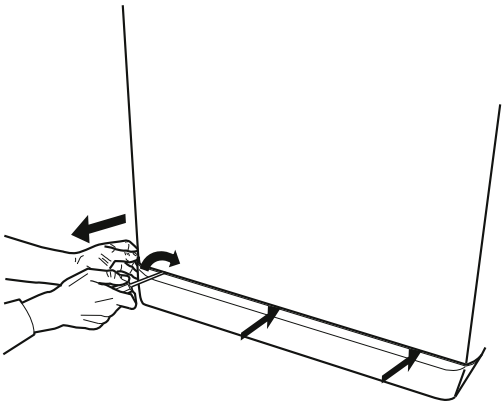

2. Container for the drained water:
Place a low and wide container under the water filter in order to collect the residual water.

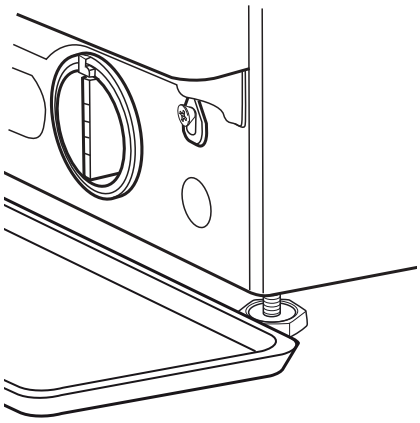

3. Drain the water:
Slowly turn the filter counter-clockwise until all the water has come out. Allow the water to flow out without removing the filter.
Once the container is full, close the water filter by turning it clockwise. Empty the container. Repeat the procedure until all the water has been drained.

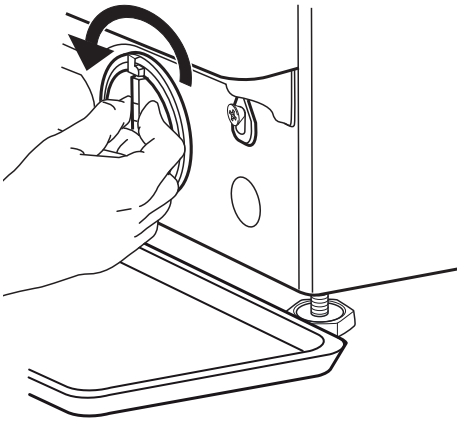

4. Remove the filter: Place a cotton cloth under the water filter in order to absorb any small amounts of residual water. Next, remove the water filter by turning it counter-clockwise.

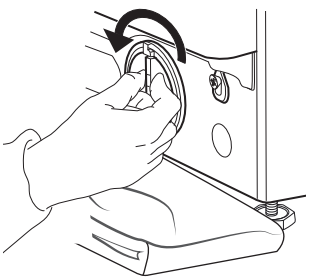

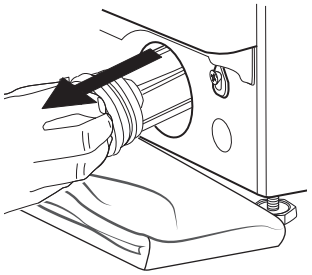

5. Clean the water filter: remove any residues from the filter and wash it under running water.

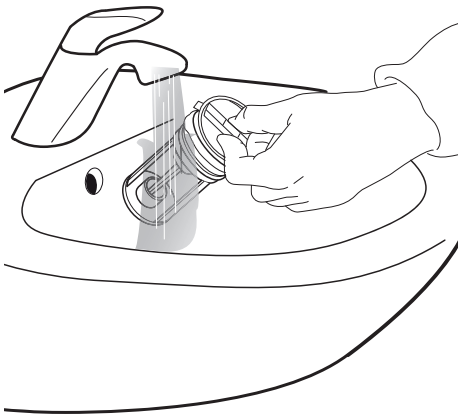

6. Insert the water filter and reinstall the kick panel: Re-insert the water filter by turning it clockwise. Turn it as far as it will go; the filter's grip should be in its vertical position. In order to check the filter's seal, pour about 1 litre of water into the detergent dispenser.
Re-install the kick panel.

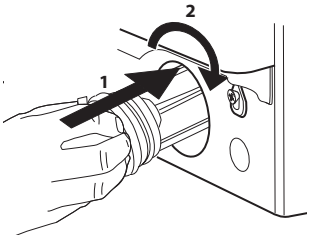

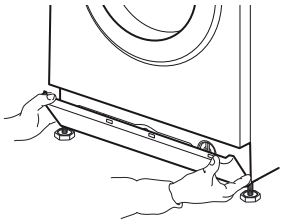

TRANSPORT AND HANDLING

⚠ WARNING

Do not lift the washer dryer while holding onto its upper surface.

1. Disconnect the electrical plug and close the water tap.

2. Check to make sure that the door and the detergent dispenser are securely closed.

3. Disconnect the intake hose from the water tap, then disconnect the drain hose. Eliminate all the residual water from the hoses, and secure them in such a way that they will not be damaged during the transport operations.

4. Reapply the transport bolts. Follow the procedure for removing the transport bolts described in the Installation Instructions, in the opposite order.
Important: never transport the washer dryer without having applied the transport bolts.

TROUBLESHOOTING

The washer dryer may sometimes not work properly for certain reasons. Before calling the Support Centre, it is recommended to check to see if the problem can be easily resolved using the following list.

Anomalies:	Possible causes / Solution:
The washer dryer does not turn on.	• The plug is not inserted into the electrical outlet, or not enough to make contact. • There has been a power failure. • The door is not fully closed.
The wash cycle does not start.	• The ON/OFF button has not been pressed. • The START/PAUSE button has not been pressed. • The water tap is not open. • A start delay has been set.
The washer dryer does not fill with water (the message "H2O" is shown on the display).	• The water intake hose is not connected to the tap. • The hose is bent. • The water tap is not open. • The mains water supply has been shut off. • There is not enough pressure.
The washer dryer loads and drains water continuously.	• The START/PAUSE button has not been pressed. • The drain hose has not been installed at 65 to 100 cm from the ground. • The end of the drain hose is immersed in water. • The drain connector on the wall does not have an air vent. If the problem persists after having performed these checks, close the water tap, shut off the washer dryer, and call the Support Centre.If the dwelling is located on one of the uppermost floors of a building, a siphon effect can sometimes occur, thus causing the washer dryer to load and drain water continuously.Special anti-siphon valves are available on the market to prevent these types of problems.
The washer dryer does not drain or does not spin.	• The programme does not include the draining function: with certain programmes it must be activated manually. • The drain hose is bent. • The drain line is obstructed.
The washer dryer vibrates excessively during the spin cycle.	• At the time of installation, the drum was not properly unlocked. • The washer dryer is not level. • The washer dryer is squeezed between furniture and the wall.
The washer dryer leaks water.	• The water intake hose has not been tightened properly. • The detergent dispenser is clogged. • The drain hose has not been properly fastened.
The indicator lights for the "Colours 15°" option and the START/PAUSE button flash quickly and the display shows an error code (e.g.: F-01, F-..).	• Shut off the machine, disconnect the plug from the outlet, and weight about 1 minute before turning it back on. If the problem persists, call the Support Centre.

Too much foam is formed.	• The detergent is not compatible with the washer dryer (it must bear the wording “for washing machines”, “ for hand washing and washing machines”, or something similar). • The dosage was excessive.
The washer dryer does not dry.	• The plug is not inserted into the electrical outlet. • There has been a power failure. • The door is not fully closed • A start delay has been set. • The DRY function is set to its 0 position.

DOOR – HOW TO OPEN IT TO REMOVE THE LAUNDRY IN THE EVENT OF A MALFUNCTION

Shut off the washer dryer and disconnect it from its electrical power supply. Close the water tap.

Wait for the drum to come to a complete stop. If a high temperature program was selected, wait for the water and the laundry to cool.

1. Drain the residual water as described in the section titled “Draining the residual water”.

2. Use a screwdriver to remove the screw.

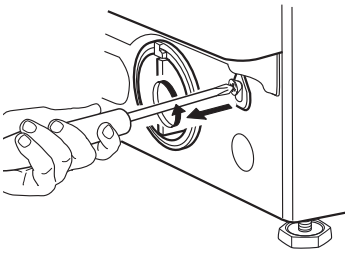

3. Pull the cord downwards as indicated in the following figure. At this point, the door will unlock and the laundry can be removed.

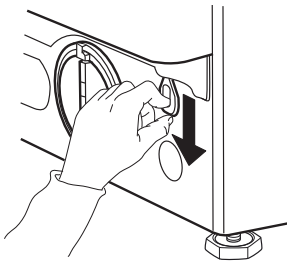

4. Afterwards, reattach the cord by inserting the screw with the help of a screwdriver.

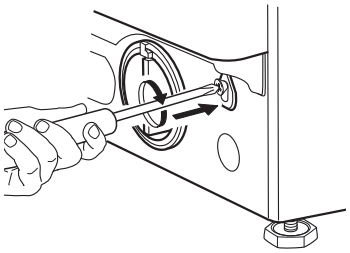

5. Re-install the kick panel.

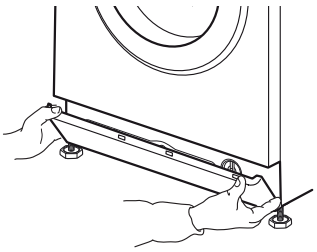

CUSTOMER SUPPORT SERVICE

BEFORE CONTACTING CUSTOMER SUPPORT

1. Try to resolve any problems you may encounter on your own by consulting the section titled.

TROUBLESHOOTING

2. Shut off the washer dryer and turn it back on to see if the problem persists.

IF THE PROBLEM PERSISTS, CONTACT CUSTOMER SUPPORT

Call the number shown on the warranty booklet, or follow the instructions provided at the **website www.whirlpool.eu**

Always provide:
A brief description of the problem.
The washer dryer model (see the data plate inside the door).
Your address and telephone number.

For any repairs that may be required, please contact an authorised Customer Support Centre in order to ensure that the repairs are performed correctly using original spare parts.

Manufacturer:
Whirlpool Europe s.r.l. - Socio Unico
Viale Guido Borghi 27
21025 Comerio (VA)
Italy

INSTALLATION GUIDES

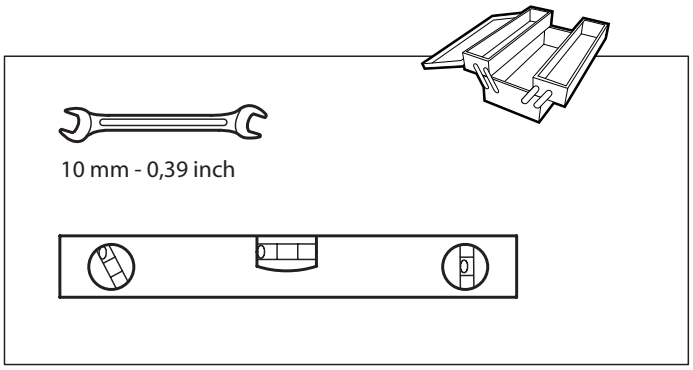

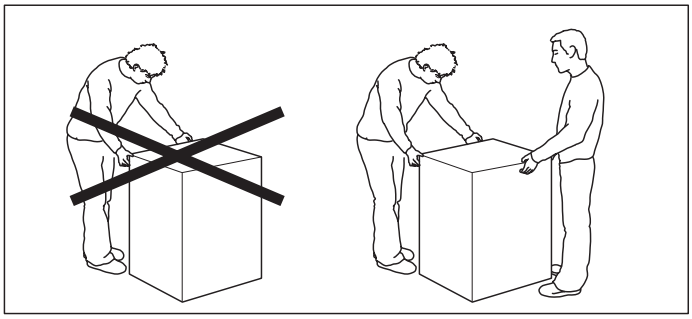

1.

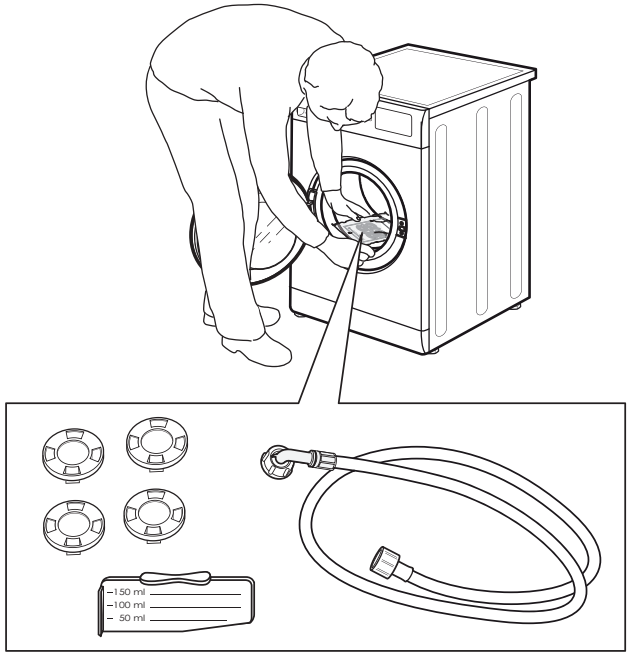

2.

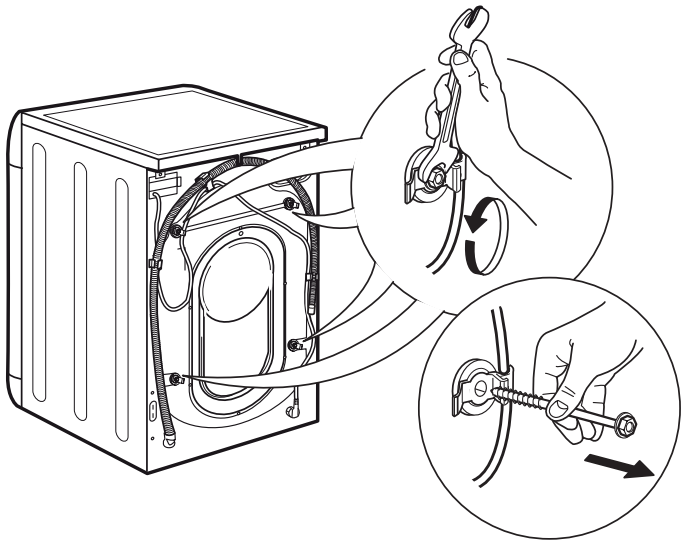

Whirlpool

3.

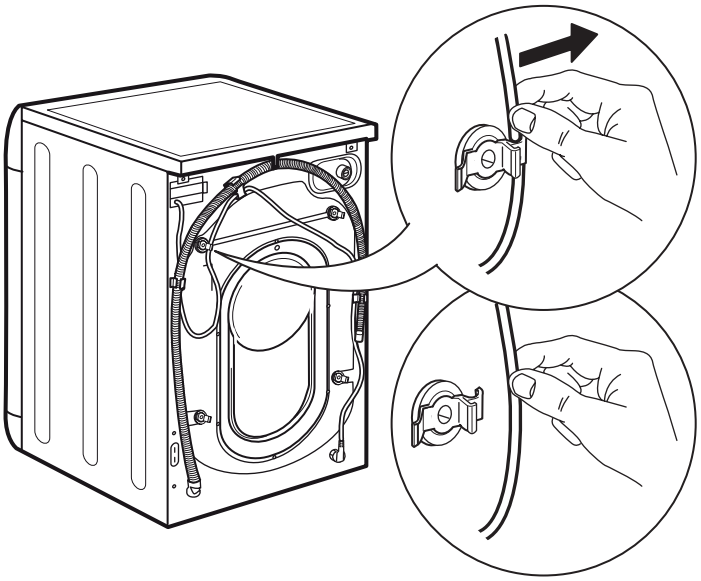

4.

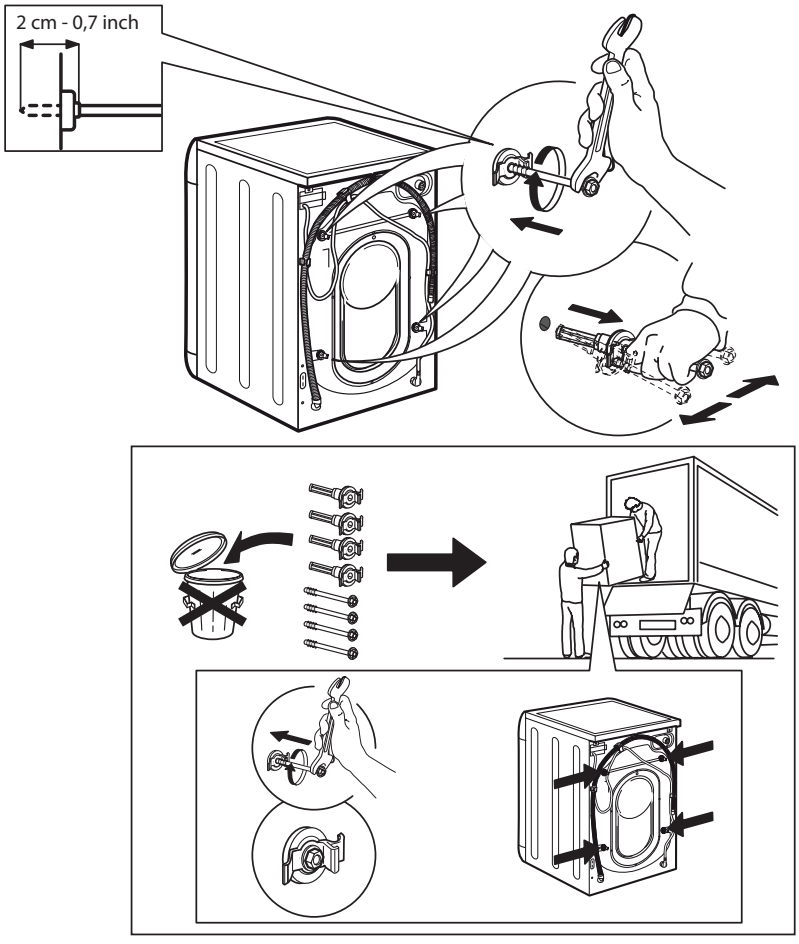

Whirlpool

5.

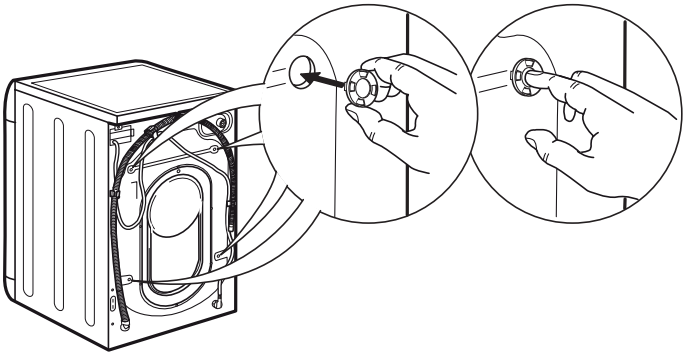

6.

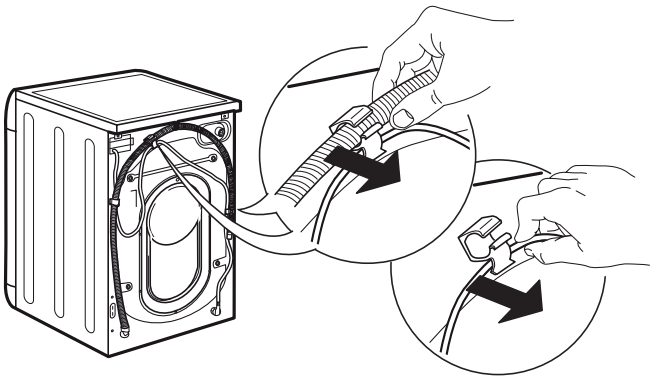

7.

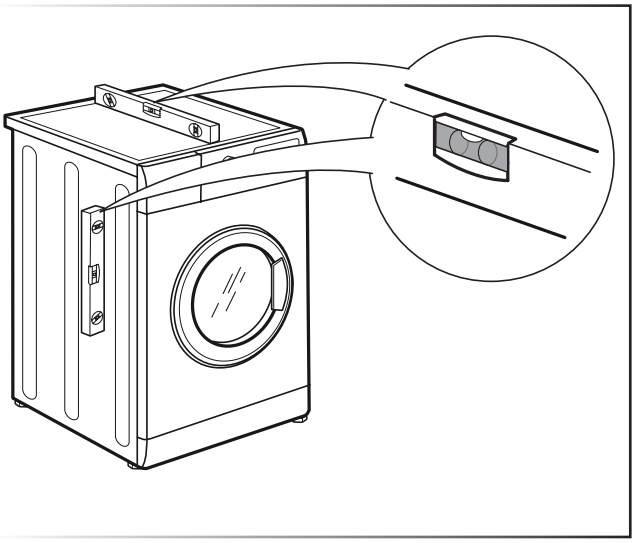

8.

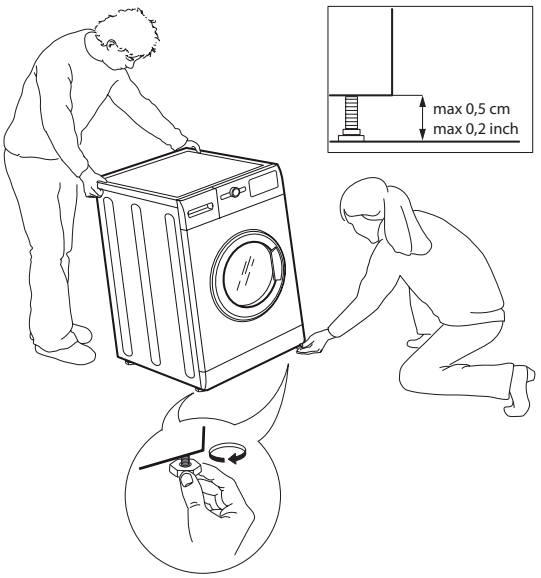

9.

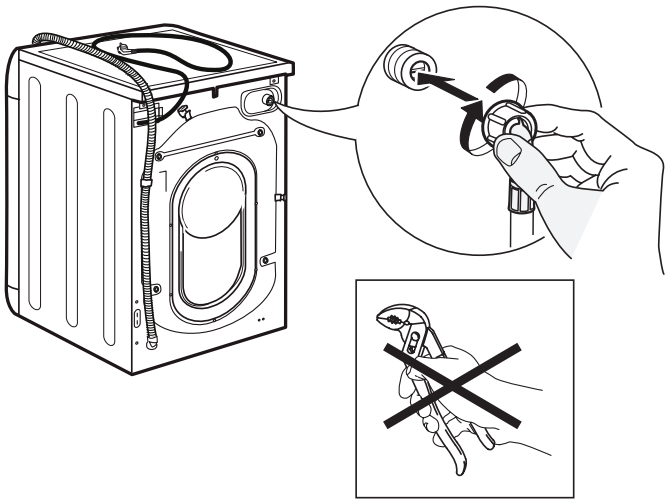

10.

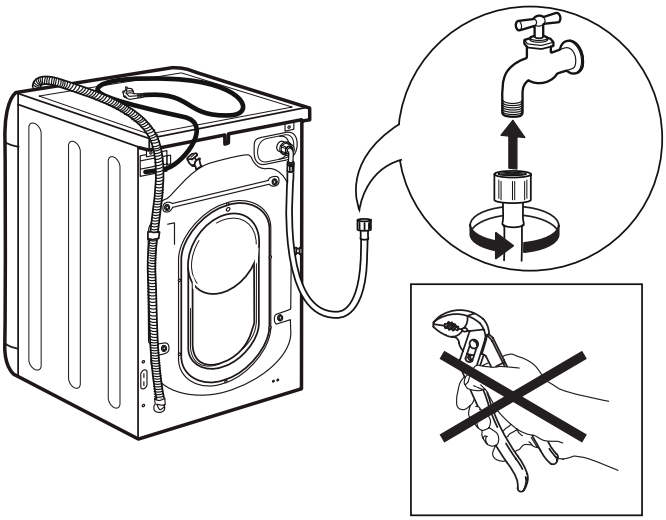

11.

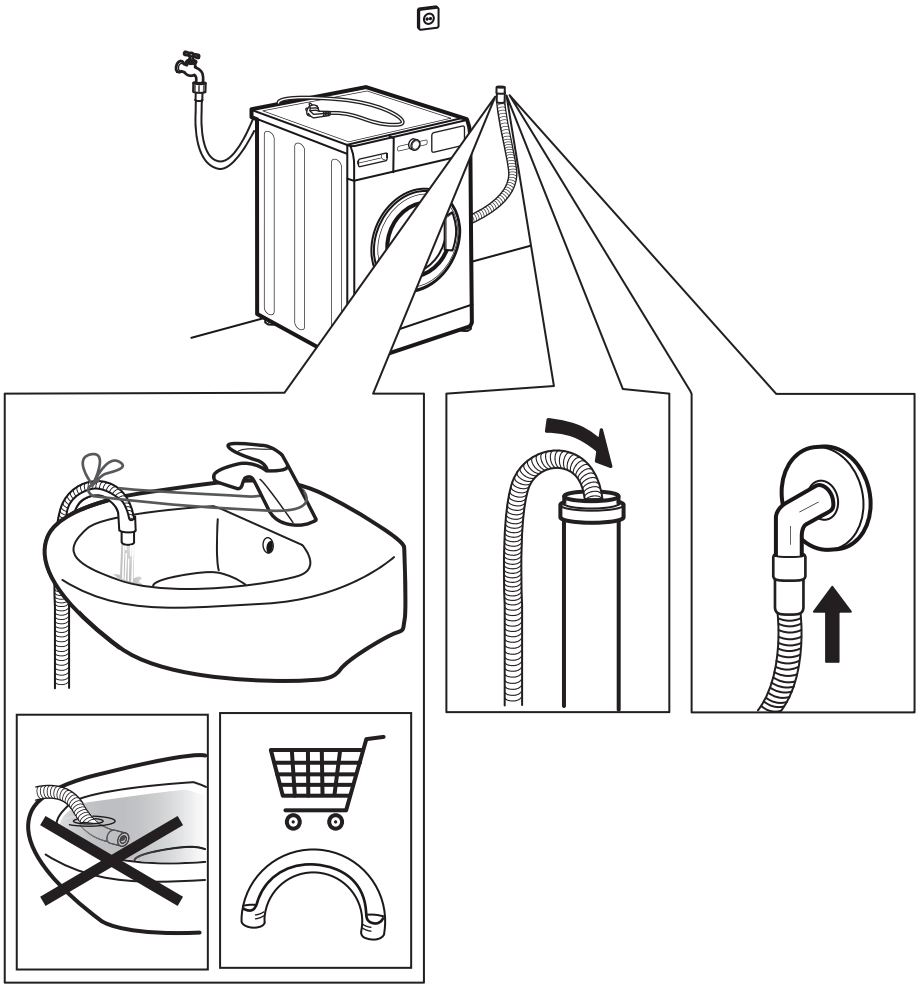

Whirlpool

12.

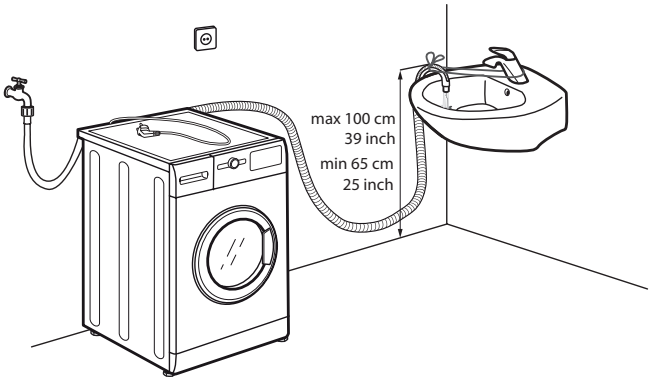

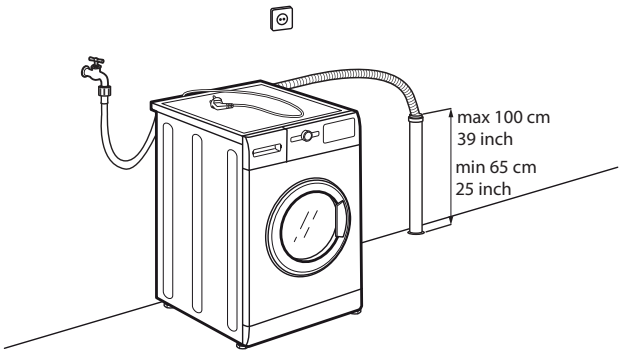

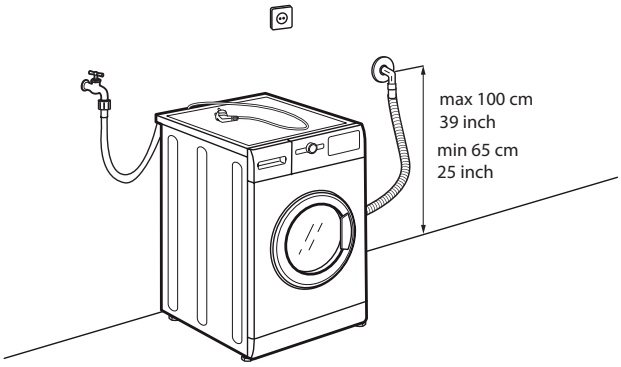

13.

14.

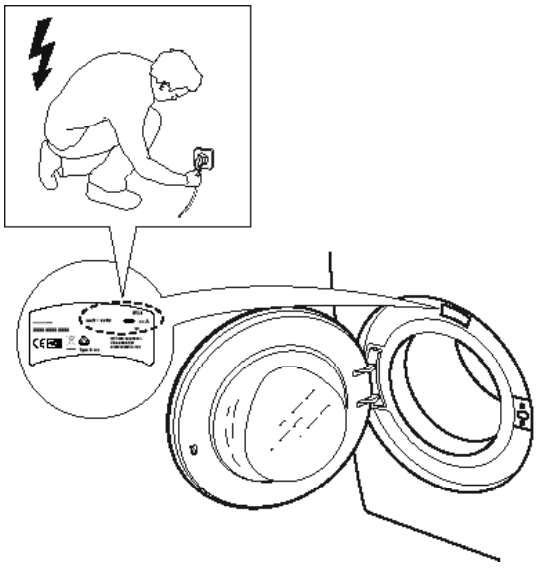

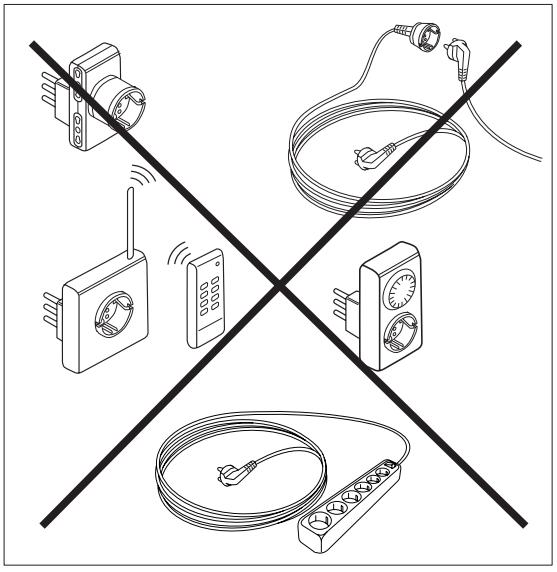

Whirlpool

Whirlpool® Registered trademark/TM Trademark of Whirlpool group of companies -
© Copyright Whirlpool Europe s.r.l. 2014. All rights reserved - http://www.whirlpool.eu