IB 5050 A1 D.UK

12NC: F093228

GTIN (EAN) code: 8007842932287

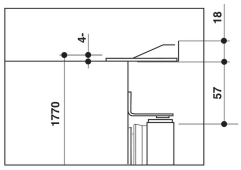

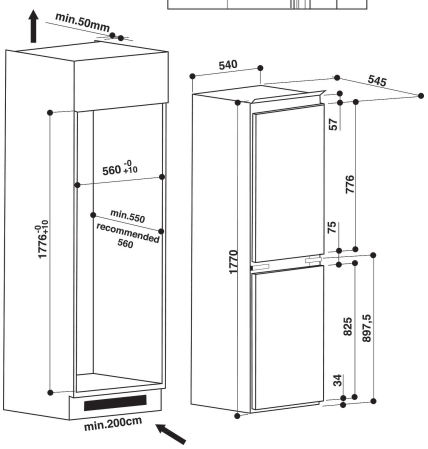

MAIN FEATURES

Product group	Fridge/freezer combination
Installation type	Built-in
Type of control	Mechanical
Construction type	Built-in
Main colour of product	Steel
Electrical connection rating (W)	140
Current (A)	13
Voltage (V)	220-240
Frequency (Hz)	50
Number of compressors	1
Length of Electrical Supply Cord (cm)	200
Plug type	UK
Total unit net capacity (l)	264
Star Rating	4
Height of the product	1770
Width of the product	540
Depth of the product	545
Maximum adjustability feet	0
Net weight (kg)	50

TECHNICAL FEATURES

Defrost process fridge section	Automatic
Defrost process freezer section	Manual
Fast cooling possibility	No
Fast freezing function	No
Door opened indicator freezer	No
Temperature adjustable	Yes
Temperature adjustable freezer	No
Interior ventilator fridge section	No
Number of freezing drawers	3
Automatic motor-driven ice-maker	N/A
Number of shelves in fridge compartment	3
Material of the shelves	Glass With Profile
Thermometer fridge section	None
Thermometer freezer section	None
Number of temperature zones	2

PERFORMANCES

Energy efficiency class - NEW (2010/30/EU)	A+
Energy consumption annual (kWh/annum) - NEW (2010/30/EU)	309
Refrigerator Net capacity (l) - NEW (2010/30/EU)	154
Freezer Net capacity (l) - NEW (2010/30/EU)	109
Freezing capacity (kg/24h) - NEW (2010/30/EU)	5
Climate class	SN-T
Noise level (dB(A) re 1 pW)	35
Frost free system	No