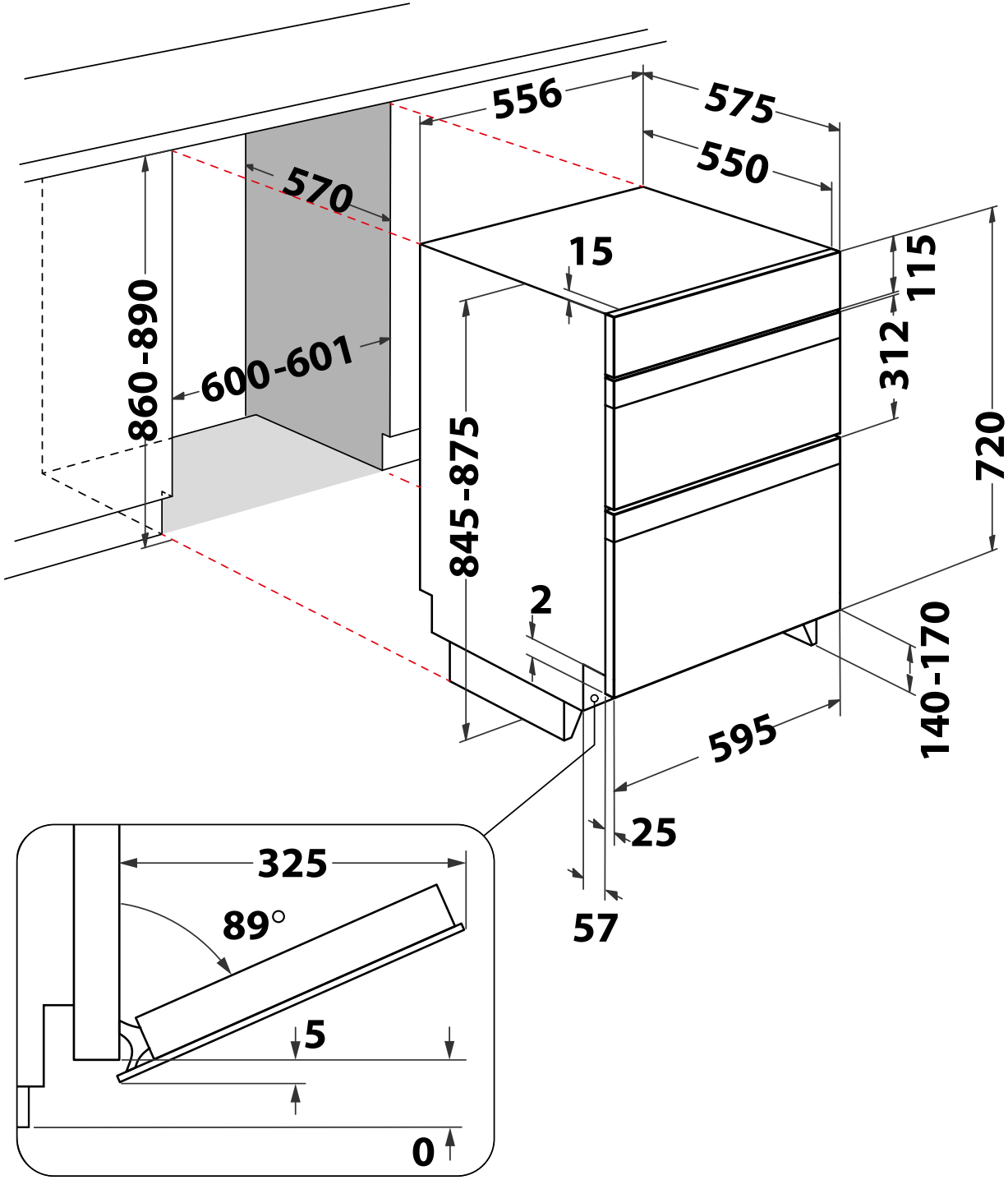
556
575
550
570
15
115
312
720
860-890
600-601
845-875
2
140-170
595
25
57
325
89°
5
0

IDU 6340 WH

12NC/Fx: F102943

GTIN (EAN) code: 8050147029435

DIMENSION	MEASURE	
OVERALL CABINET		
MIN Height of the wall cabinet niche, including all required space for installation or ventilation	860	mm
MIN Height of the tall cabinet niche, including all required space for installation or ventilation	0	mm
MIN Height of the base cabinet niche, including all required space for installation or ventilation	860	mm
MAX Height of the wall cabinet niche, including all required space for installation or ventilation	890	mm
MAX Height of the tall cabinet niche, including all required space for installation or ventilation	0	mm
MAX Height of the base cabinet niche, including all required space for installation or ventilation	890	mm
MIN Width of the wall cabinet niche, including all required space for installation or ventilation	600	mm
MIN Width of the tall cabinet niche, including all required space for installation or ventilation	0	mm
MIN Width of the base cabinet niche, including all required space for installation or ventilation	600	mm
MAX Width of the wall cabinet niche, including all required space for installation or ventilation	600	mm
MAX Width of the tall cabinet niche, including all required space for installation or ventilation	0	mm
MAX Width of the base cabinet niche, including all required space for installation or ventilation	601	mm
MIN Depth of the wall cabinet niche, including all required space for installation or ventilation	570	mm
MIN Depth of the tall cabinet niche, including all required space for installation or ventilation	0	mm
MIN Depth of the base cabinet niche, including all required space for installation or ventilation	570	mm
Space in front, which is required to install bottom trim	0	mm
Indicates whether a ventilation opening is needed or not. Default is "N"	No	
WALL CABINET (vent-shaft incoming)		
Indicates the position of the freespace for the inbound airflow (wall cabinet)	Rear	
Minimum space or inbound ventilation (wall cabinet)	0	mm
Minimum area for inbound ventilation cavity (wall cabinet)	0	cm²
WALL CABINET (vent-shaft outgoing)		
Indicates the position of the freespace for the outbound airflow (wall cabinet)	Rear	
Minimum space or outbound ventilation (wall cabinet)	0	mm
Minimum area for outbound ventilation cavity (wall cabinet)	0	cm²
TALL CABINET (vent-shaft incoming)		
Indicates the position of the freespace for the inbound airflow (tall cabinet)	Rear	
Minimum space for inbound ventilation (tall cabinet)	0	mm
Minimum area for inbound ventilation cavity (tall cabinet)	0	cm²
TALL CABINET (vent-shaft outgoing)		
Indicates the position of the freespace for the outbound airflow (tall cabinet)	Rear	
Minimum space for outbound ventilation (tall cabinet)	0	mm
Minimum area for outbound ventilation cavity (tall cabinet)	0	cm²
BASE CABINET (vent-shaft incoming)		
Indicates the position of the freespace for the inbound airflow (base cabinet)	Rear	
Minimum space for inbound ventilation (base cabinet)	0	mm
Minimum area for inbound ventilation cavity (base cabinet)	0	cm²
BASE CABINET (vent-shaft outgoing)		
Indicates the position of the freespace for the outbound airflow (base cabinet)	Rear	
Minimum space for outbound ventilation (base cabinet)	0	mm
Minimum area for outbound ventilation cavity (base cabinet)	0	cm²

DIMENSION	MEASURE	
APPLIANCE		
Height of the front	720	mm
Width of the front	595	mm
Depth of the front	25	mm
Maximum depth all protruding elements, e.g. handles, controls	39	mm
Lateral clearance between front edge and most protruding elements which avoid to open a neighbour front more than 90 degrees	61	mm
Projection of front in relation to housing of appliance	15	mm
Projection of front in relation to bearing area of the appliance. Taken at minimum height of appliance, if height is adjustable	2	mm
When product panel is missing, set to 0	115	mm
Space in front, which is required to guarantee full operability. The most protruding part gives this dimension	325	mm
Height from bearing area of appliances and lower handle	312	mm
Frontal handle thickness	21	mm
Frontal handle width	474	mm
MIN Height of the product body	845	mm
MAX Height of the product body	875	mm
Width of the product body	556	mm
Depth of the product body	550	mm
Full depth of product excluding protruding interface elements	575	mm
-	-	mm
-	-	mm
-	-	mm
-	-	mm
-	-	mm
-	-	mm
MIN depth between plinth return and front	57	mm
MAX depth between plinth return and front	57	mm
Height MIN Plinth return. This dimension is taken by minimum appliance height	140	mm
Height MAX Plinth return. This dimension is taken at maximum appliance height	170	mm
Appliance can be used as base for other appliances from the same manufacturer. Default is "No"	No	
Appliance Flap door		
Projection of the opened flap in relation to bearing area	5	mm
Maximum angle when flap door is opened totally	89	mm
Appliance Side swing door		
Lateral projection of front incl. controls when door is opened totaly. At the side where the hinge is mounted	0	mm
Lateral projection of opened front at the side where the hinge is fixed	0	mm
Maximum angle when door is opened totally	0	mm
Appliance other		
Depth from front end of the niche to the front end of the freespace of the retrace	65	mm
Height from niche to bottom end of freespace for the retrace	685	mm