AKT 8360 LX

12NC: 859990964300

GTIN (EAN) code: 8003437829000

Whirlpool
SENSING THE DIFFERENCE

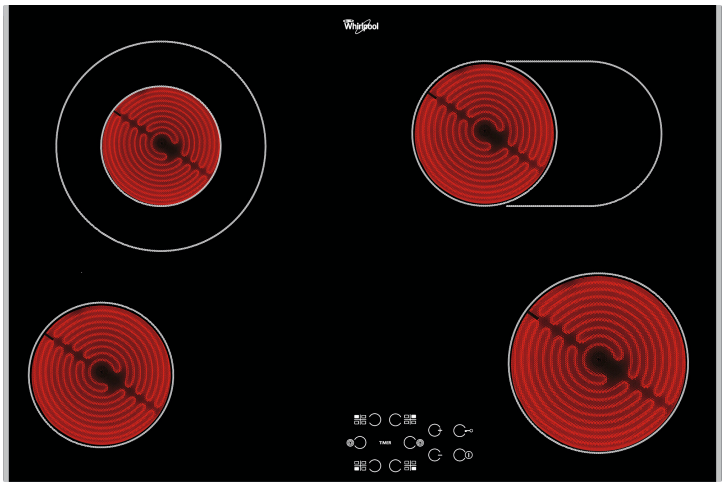

Whirlpool hob - AKT 8360 LX

This Whirlpool Hob features: electric power supply.

Touch control
Cooking at the press of a button. Thanks to TouchControl, the precise control of your hobs is at your finger tips. The sensor power regulation does without the 10 phases on most dials and thus allows for simpler cleaning and care for your hob.

Front Controls
Complete control over your cooking. Easily accessible and genuinely intuitive, the controls are conveniently positioned on the front panel of your hob, providing a frictionless cooking experience.

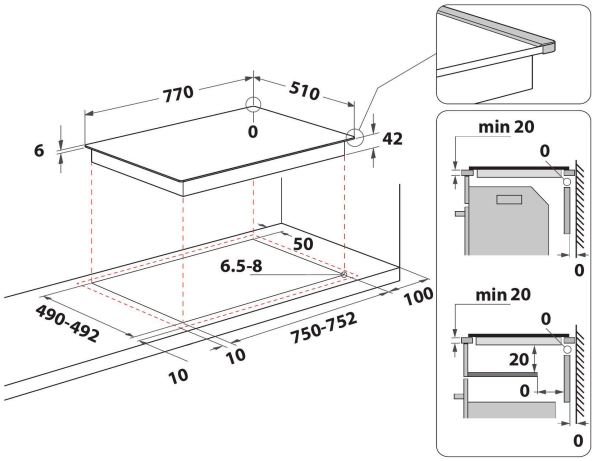

- Residual heat indicator
- Child lock
- On/Off Switch
- 77 cm hob
- Timer
- Black Glass Hob
- 4 Radiant cooking zones
- 4 Cooking zones: 1 Radiant 1200 W, 1 Radiant 700/2100 W, 1 Radiant 1000/1800 W, and 1 Radiant 1700 W
- Inox frame
- Dimensions HxWxD: 46x770x510 mm
- Niche dimensions HxWxD: 42x750x490 mm
- Electrical Connection Rating: 5500 W
- Voltage: 220-240/380-415 V
- Front left zone: 145 mm Ø, 1200 W
- Rear left zone: 120/210 mm Ø, 700/2100 W
- Rear right zone: 145/250 mm Ø, 1000/1800 W

AKT 8360 LX

12NC: 859990964300

GTIN (EAN) code: 8003437829000

Whirlpool
SENSING THE DIFFERENCE

MAIN FEATURES

Product group	Hob
Construction type	Built-in
Type of control	Electronic
Type of control settings	-
Number of gas burners	0
Number of electric cooking zones	4
Number of electric plates	0
Number of radiant plates	4
Number of halogen plates	0
Number of induction plates	0
Number of electric warming zones	0
Location of control panel	Front
Basic surface material	Glass
Main colour of product	Black
Electrical connection rating (W)	5500
Gas connection rating (W)	0
Gas type	N/A
Current (A)	24
Voltage (V)	220-240/380-415
Frequency (Hz)	50/60
Length of Electrical Supply Cord (cm)	0
Plug type	No
Gas connection	N/A
Width of the product	770
Height of the product	46
Depth of the product	510
Minimum niche height	42
Minimum niche width	750
Niche depth	490
Net weight (kg)	12
Automatic programmes	No

TECHNICAL FEATURES

Power on indicator	No
Number of indicators	0
Type of regulation	Temperature regulated
Type of lid	Without
Residual heat indicator	Separate
Main on/off switch	Yes
Safety device	-
Timer	Yes

PERFORMANCES

Energy input	Electric